MAGPOWR TENSION CONTROL

# DLCA NET-SLIM

## User Manual

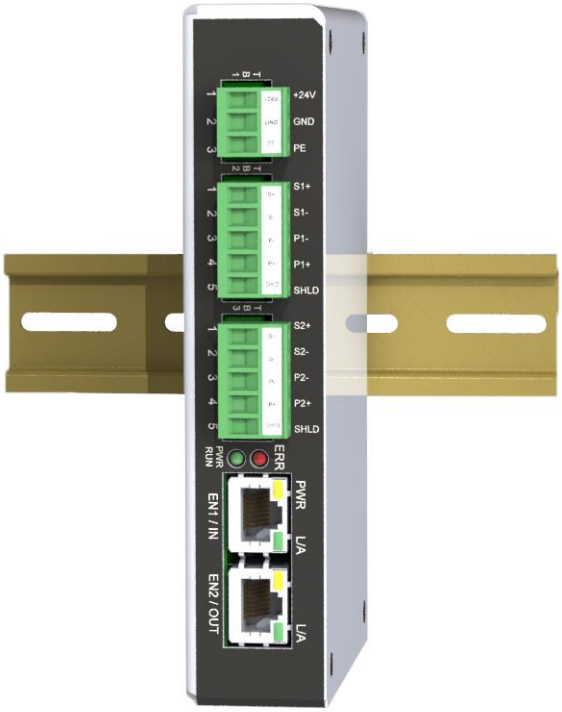


EN

Digital Load Cell Amplifier

MI 850A358 1 C

# CONTENTS


1.0 INTRODUCTION 4
- 1.1 About these operating instructions 4
- 1.2 Product overview 5
  - 1.2.1 Additional tools 6
- 1.3 Model number 7
- 1.4 Serial number 7

2.0 SAFETY 8
- 2.1 Instructions for use 8
- 2.2 Symbols used 8
- 2.3 Basic safety information 9

3.0 INSTALLATION 11
- 3.1 Mechanical 11
  - 3.1.1 DCLA NET-SLIM mounting options 12
- 3.2 Electrical 13
- 3.3 Wiring diagrams 13
  - 3.3.1 DLCA NET-SLIM1 wiring using MAGPOWR load cells 14
  - 3.3.2 DLCA NET-SLIM2 wiring using MAGPOWR load cells 15
  - 3.3.3 Non-MAGPOWR load cell wiring 16

4.0 LED INDICATORS 17

5.0 COMMUNICATIONS INTERFACE 18
- 5.1 Cyclic parameters 18
- 5.2 Actual tension data 19
- 5.3 Security state 20
- 5.4 Status 20
- 5.5 Alarm 20
- 5.6 Command interface 21
  - 5.6.1 Command request 22
  - 5.6.2 Command/parameter list 22
  - 5.6.3 Command response 26
- 5.7 Function information 27
  - 5.7.1 Security 27
  - 5.7.2 Reset non-volatile (NV) memory to defaults 28
  - 5.7.3 Zeroing the tension 28
  - 5.7.4 Reset Processor 28
- 5.8 Get or set parameters 28
  - 5.8.1 Get a parameter 28
  - 5.8.2 Set a parameter 28

6.0 PARAMETERS 29
- 6.1 Filtering 29
- 6.2 Alarm setup and operation 30

# CONTENTS


6.2.1 Alarm operation with hysteresis ..... 31
6.3 Hardware configuration parameters ..... 32

7.0 CALIBRATION 34
7.1 Precision calibration procedure ..... 35
7.2 Weightless calibration procedure ..... 38
7.3 Calibration errors returned ..... 41

8.0 WEB SERVER ACCESS 42
8.1 Confirm web server access ..... 42
8.2 Web pages ..... 43
8.3 Tension calibration from web pages ..... 44
8.3.1 Precision calibration from web pages ..... 44
8.3.2 Weightless calibration from web pages ..... 45
8.4 Zero tension from web pages ..... 45

9.0 SPECIFICATIONS 46

10.0 SERVICE 47


FIGURES


Figure 1. DLCA NET-SLIM dimensions ..... 11
Figure 2. DLCA NET-SLIM mounting options ..... 12
Figure 3. DLCA NET-SLIM1 wiring using MAGPOWR load cells ..... 14
Figure 4. DLCA NET-SLIM2 wiring using MAGPOWR load cells ..... 15
Figure 5. Non-MAGPOWR load cell wiring ..... 16
Figure 6. DLCA NET-SLIM indicators ..... 17
Figure 7. Examples - maximum tension values ..... 19
Figure 8. Apply calibration tension ..... 36
Figure 9. Weightless calibration angles ..... 40
Figure 10. Sample web server page ..... 43


TABLES


Table 1. Calibration errors ..... 41

Appendix A: DLCA NET-SLIM Flowchart ..... 48

# 1.0 Introduction

## 1.1 About these operating instructions

All of the information herein is the exclusive proprietary property of Maxcess International, and is disclosed with the understanding that it will be retained in confidence and will neither be duplicated nor copied in whole or in part nor be used for any purpose other than for which disclosed.

Copyright 2018, all rights reserved.

Periodically there will be updates to this manual. The latest version is available on our website or by calling your regional office listed on the back page of this publication.

These digital load cell amplifiers must not be installed or used in a machine or system which does not comply with the machinery directive 2006/42/EC.

These digital load cell amplifiers were designed and manufactured to be installed as Partly Completed Machinery into a machine or partly completed machine.

The instructions must be read and used by all persons who have the responsibility of installing and maintaining this digital load cell amplifier.

These instructions must be retained and incorporated in the technical documentation for the machine or partly completed machinery into which the digital load cell amplifier is installed.

**CE marking**
This digital load cell amplifier is marked with the CE sign according to the EMC directive 2004/108/EC.

**Conventions used in this manual**
All dimensions and specifications are shown in the format mm [inches] unless specified otherwise.

**Language**
These are the original instructions, written in English.

## 1.2 Product overview

The DLCA NET-SLIM is a DIN rail-mounted digital load cell amplifier that provides excitation voltage for load cells, measures the returned force signal, and then converts this signal into a calibrated digital value representing tension. The tension values have at least 14-bit resolution.

The digital tension value is available in the fieldbus data on Modbus TCP, Ethernet/IP or PROFINET IO. The DLCA NET ships with Modbus TCP enabled. The user can select the other protocols during setup from the web server page.

Configuration and calibration are available through the fieldbus interface or on the embedded web server page and a computer.

There are two models of the DLCA NET-SLIM. Each one has two sensor inputs (channels). Each channel can have up to two load cells attached.

DLCA NET SLIM1 reads load cells from one tension zone

- Channel 1 reads a single load cell or a tension-sensing roller.
- Channels 1 and 2 read two separate load cells, respectively, in a single tension zone. This would typically be the left and right load cells.
- Tension values are sent from the load cells for the left and right inputs. Two additional values are sent on the communications interface; they are the sum and difference of the left and right inputs (channels 1 and 2).

DLCA NET-SLIM2 reads load cells from two tension zones

- Channel 1 reads load cell(s) in one tension zone — one or two load cells or a single tension-sensing roller per zone.
- Channel 2 reads load cell(s) in a second tension zone — one or two load cells or a single tension-sensing roller per zone.
- Tension values are sent from the load cells for each tension zone. The sum and difference values sent on the communications interface are set to zero.

*continued*

Two programmable alarms are available that can be configured to sense tension limits. These can be set up on the left, right and total tensions on the DLCA NET-SLIM1, and on channel 1 and channel 2 tensions on the DLCA NET-SLIM2.

Re-zeroing of the tension display and output can be performed with a command through the fieldbus interface for each of the tension zones.

Load cell diagnostics run during power-up and provide information about load cell wiring problems.

The DLCA NET-SLIM has a web server interface to allow configuration and calibration from a web browser.

### 1.2.1 Additional tools

Two software tools can be downloaded and installed for use with the DLCA NET:

The **DLCA NET Data Logger** software provides an easy way to record tension data on your computer without complicated programming.

The **Terminal Tool** software backs up your DLCA NET settings, which you can then upload after a reset or replacement.

The manuals for these tools are available at *www.maxcessintl.com.*

## 1.3 Model number

The model number and the serial number are shown on the enclosure. The model number consists of the base model **DLCA NET-SLIM** followed by the numeral 1 or 2 to denote number of tension zones the product will read.

**Available models**

| | |
|---|---|
| **DLCA NET-SLIM1** | One tension zone amplifier |
| **DLCA NET-SLIM2** | Two tension zone amplifier |

## 1.4 Serial number

**Serial Number format is MMDDYYNNNL**

MM = month
DD = day
YY = last two digits of the year
NNN = a sequence number
L = manufacturing location

# 2.0 Safety

## 2.1 Instructions for use

To ensure safe and problem free installation of the digital load cell amplifier, the digital load cell amplifier must be properly transported and stored, professionally installed and placed in operation. Proper operation and maintenance will ensure a long service life of the device. Only persons who are acquainted with the installation, commissioning, operation and maintenance of the system and who possess the necessary qualifications for their activities may work on the digital load cell amplifier.
Note: The safety information may not be comprehensive.

Please note the following:

- The content of these operating instructions
- Any safety instructions on the device
- The machine manufacturer's specifications
- All national, state, and local requirements for installation, accident prevention and environmental protection

## 2.2 Symbols used

The following safety identification symbols are used in these operating instructions.

| | |
|---|---|
| | WARNING/CAUTION – General danger or important note<br>Reference to general hazards that may result in bodily injuries or damage to device or material. |
| | WARNING/CAUTION – Danger due to crushing<br>Reference to danger of injury caused by crushing. |
| | WARNING/CAUTION – Danger due to cutting<br>Reference to danger of injury caused by cutting. |
| | WARNING/CAUTION – Danger due to voltage, electric shock<br>Reference to danger of injury caused by electric shock due to voltage. |
| | WARNING/CAUTION – Danger due to hot surfaces<br>Reference to risk of injury caused by burning. |

## 2.3 Basic safety information

**Proper use**

The DLCA NET-SLIM load cell amplifier is intended to be used on machines or systems to amplify the signal from MAGPOWR or competitor load cells.

For indoor operation, see environmental specifications on page 46.

**Improper use**

- Operation outside the technical specifications
- Operation in an Ex-area or intrinsically safe area.
- Outdoor operation.
- Any other use than the proper use shall be deemed inappropriate.

**Installation and commissioning**

- Any digital load cell amplifier which is damaged must not be installed or put into operation.
- Only perform installation, maintenance or repair tasks on the digital load cell amplifier when the machine into which the DLCA NET-SLIM is installed has been stopped and is secured from being turned on.
- Only perform installation, maintenance or repair tasks on the digital load cell amplifier when there is no electrical power in the system.
- The digital load cell amplifier must be securely mounted before being placed in operation.
- Only replacement parts obtained from Maxcess may be used.
- No modifications may be made to the digital load cell amplifier.
- Do not place electrical cables under mechanical strain.

WARNING – Death or injury can result from static electric shocks.

Moving webs of material can produce large static voltage potentials. Protect against electric shocks by installing a conductive connection between the terminal marked with the PE symbol TB1.3 and the PE circuit of the building or machine.

WARNING – Death or injury can result from unexpected movement of the machine into which the DLCA NET-SLIM is installed.

Protect against unexpected movement by removing electrical power from the digital load cell amplifier and the machine into which the digital load cell amplifier is being installed.

*Basic safety information continued*

### Operation

None, as tasks from the operator are generally not required.

### Maintenance and repair

WARNING – Death or injury can result from unexpected movement of the machine into which the DLCA NET-SLIM is installed.

Protect against unexpected movement by removing electrical power from the digital load cell amplifier and the machine into which the digital load cell amplifier is installed.

WARNING – Danger of injury from crushing.

Maintenance and repair tasks on the digital load cell amplifier must be performed only when the machine into which the DLCA NET-SLIM has been installed has been stopped and has been secured from being turned on again.

### Decommissioning

The digital load cell amplifier must be disposed of in accordance with all the applicable national, state and local regulations.

# 3.0 Installation

Use shielded cable for all cables except for power cable.

## 3.1 Mechanical

1. Mount the DLCA NET-SLIM to a 35 mm DIN rail.
   See Figure 1 for DLCA NET-SLIM dimensions.
   See Figure 2 for mounting options.

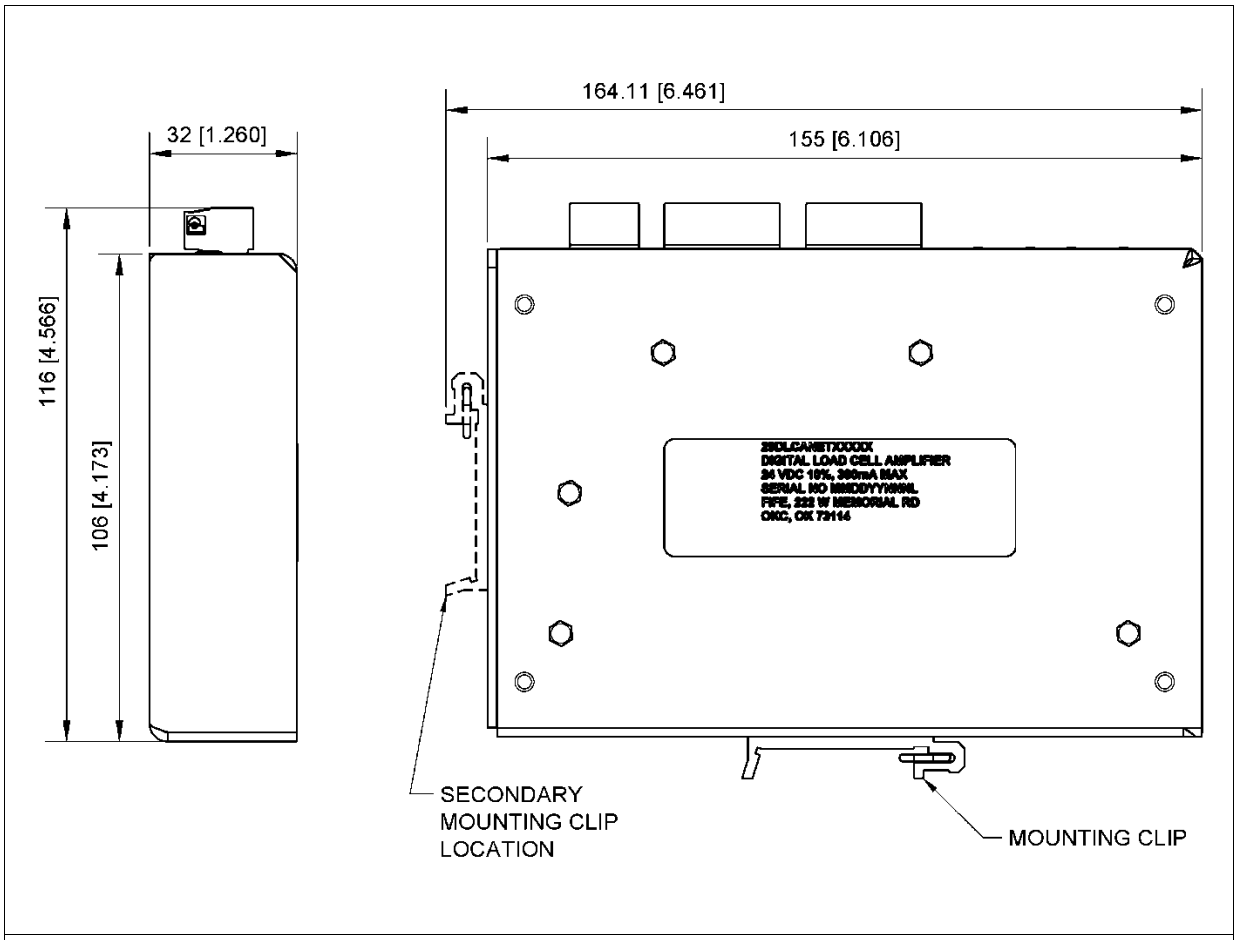


Figure 1. DLCA NET-SLIM dimensions

### 3.1.1 DCLA NET-SLIM mounting options

There are four mounting options. Rotate the mounting clip or move it to a secondary location on the DLCA NET-SLIM to mount the unit as needed. See Figure 1 for clip locations.

- Rotate the clip as needed for your mounting option.
- Use a #1 Phillips screwdriver to remove the screws that secure the clip.

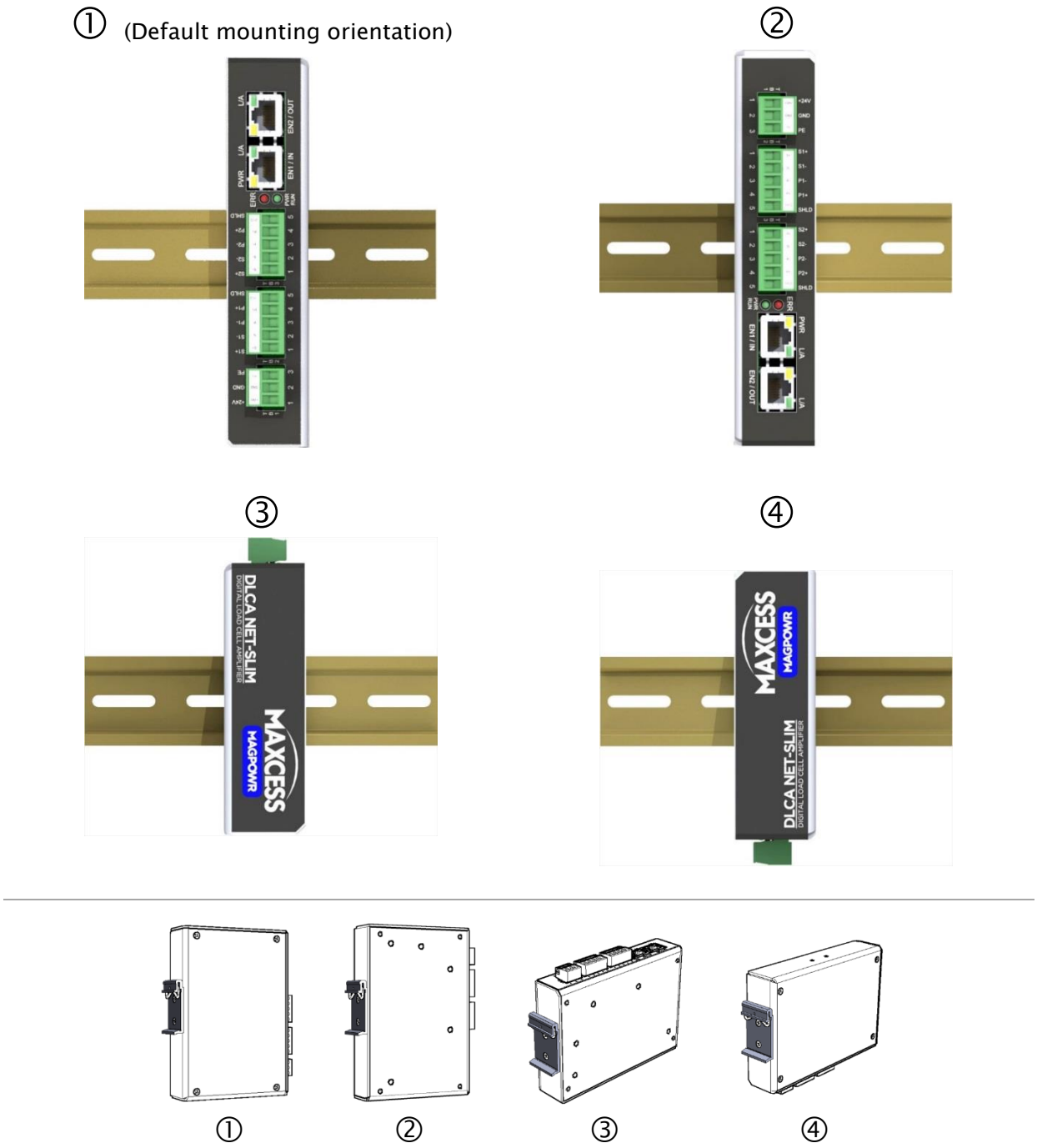


Figure 2. DLCA NET-SLIM mounting options

## 3.2 Electrical

1. Connect a 24 VDC ±10% power supply to TB1.1 (+24V) and TB1.2 (COM).
2. Connect the PE of the building or machine to terminal TB1.3 (PE).

   **Note:** The negative power connection TB1.2 is internally connected to the PE connection TB1.3. This connection is used for EMC compliance.
3. Connect one or two load cells to each sensor input on TB2 and TB3.
4. Connect the Ethernet ports into a fieldbus network or computer.

## 3.3 Wiring diagrams

**Figures 3 and 4:** DLCA NET-SLIM wiring connections using MAGPOWR load cells

**Figure 5:** Connecting non-MAGPOWR load cells

TB2 is Channel 1 or Tension Zone 1 input.
TB3 is Channel 2 or Tension Zone 2 input.

| | |
|---|---|
| P1+ and P2+ | Positive excitation |
| P1- and P2- | Negative excitation |
| S1+ and S2+ | Positive signal |
| S1- and S2- | Negative signal |

### 3.3.1 DLCA NET-SLIM1 wiring using MAGPOWR load cells

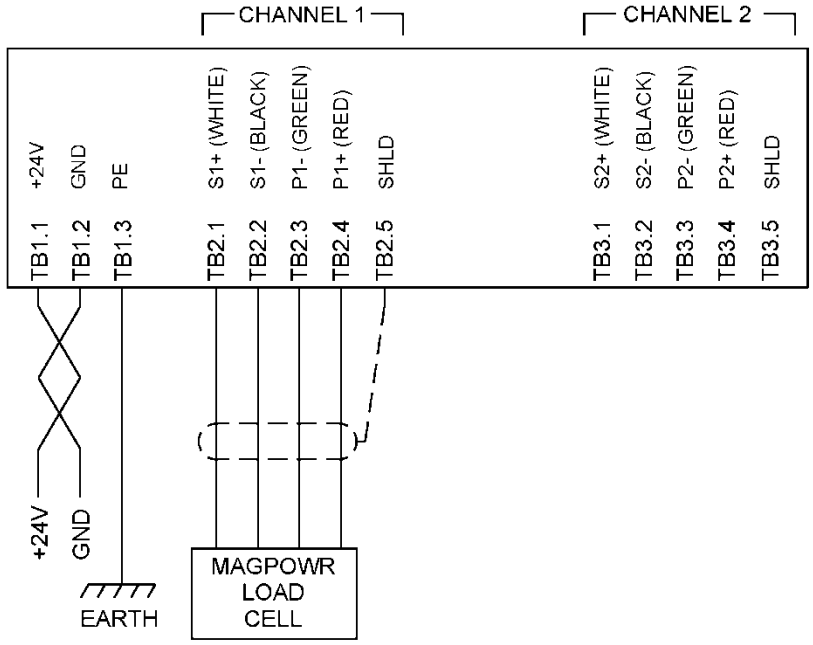


DLCA NET-SLIM1
one load cell or
tension-sensing roller
from one tension zone

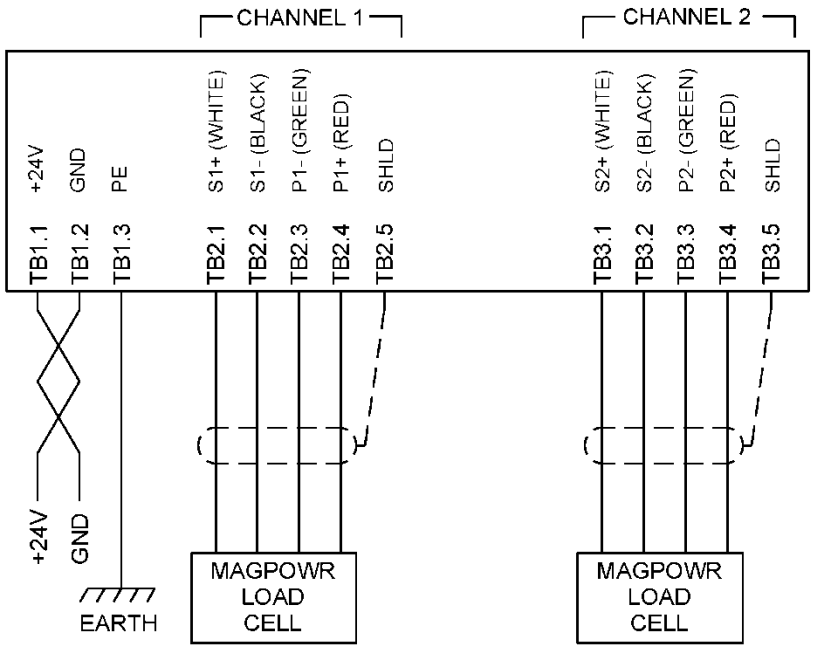


DLCA NET-SLIM1
one or two load cells
from one tension zone

Figure 3. DLCA NET-SLIM1 wiring using MAGPOWR load cells

### 3.3.2 DLCA NET-SLIM2 wiring using MAGPOWR load cells

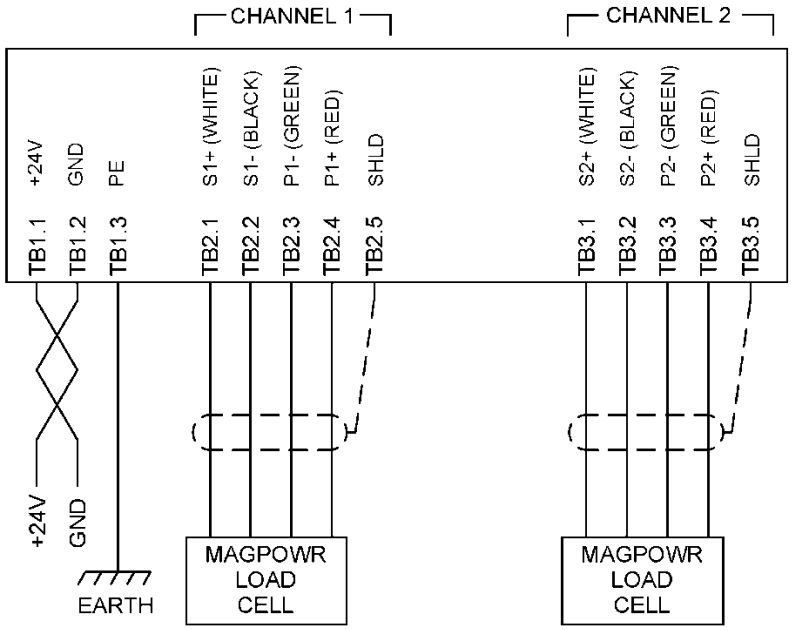


DLCA NET-SLIM2
two tension zones,
one load cell from each zone

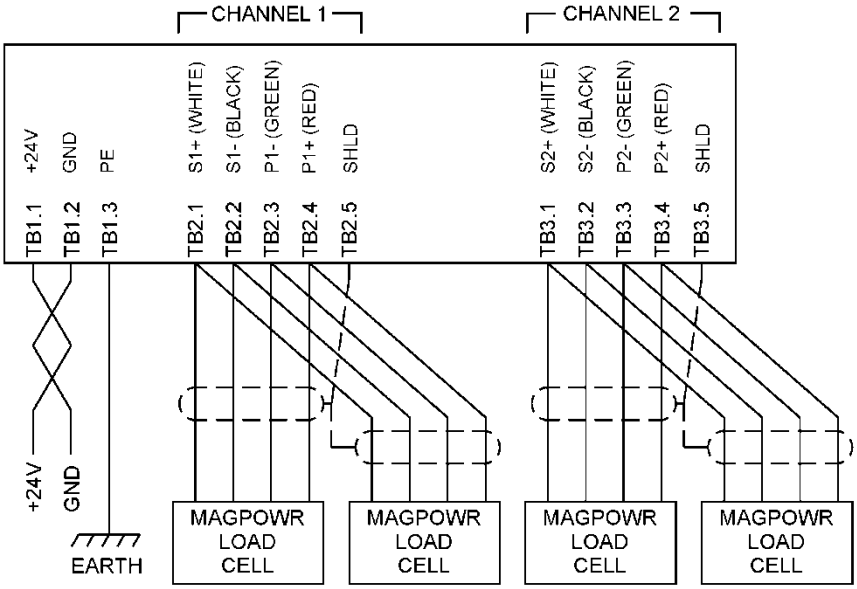


DLCA NET-SLIM2
two tension zones,
one or two load cells
from each zone

**Figure 4. DLCA NET-SLIM2 wiring using MAGPOWR load cells**

### 3.3.3 Non-MAGPOWR load cell wiring

Two Half Bridge
500 mV Load Cells

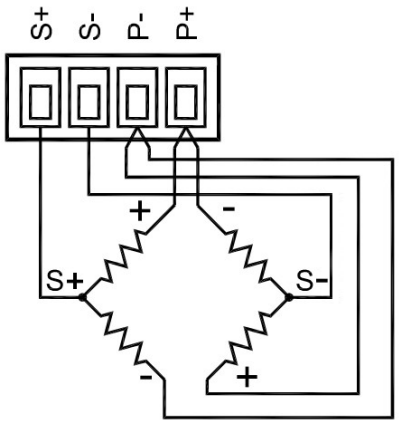


One Half Bridge
500 mV Load Cells

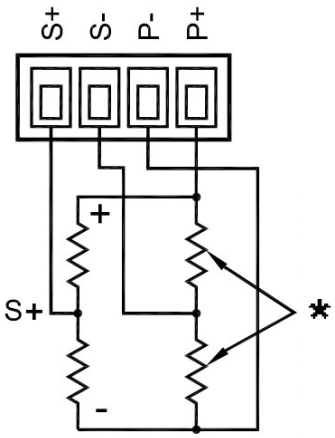


* Precision bridge completion resistors; contact load cell manufacturer for values.

Figure 5. Non-MAGPOWR load cell wiring

# 4.0 LED Indicators

There are four LED indicators on the DLCA NET-SLIM.

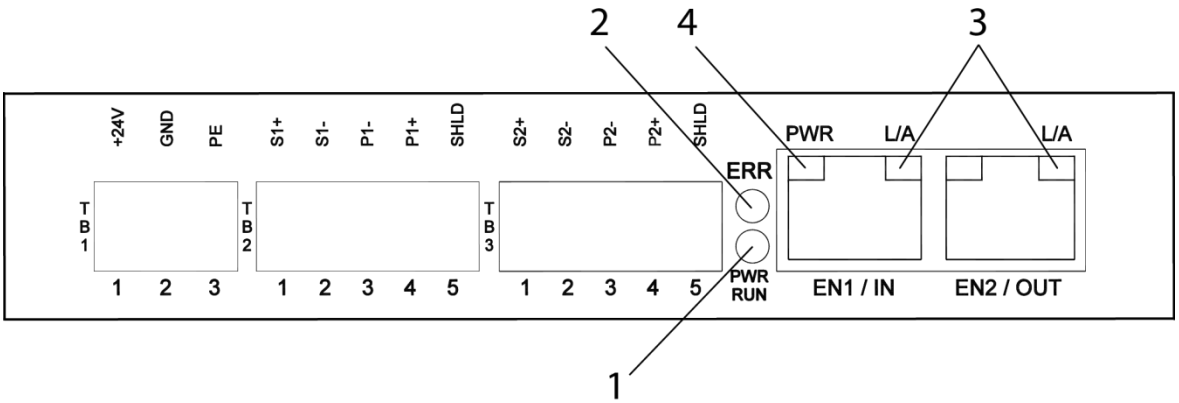


Figure 6. DLCA NET-SLIM indicators

1 **Power** (Green)
When power is on the Power indicator will be on.

2 **Error** (Red)
The Error indicator will show voltage errors or a load cell check error. One flash per second indicates a load cell check error. Two flashes per second indicates that there is a voltage error on either the load cell excitation, internal 12V or internal 5V supplies.

The load cell check only runs during power-up. The voltage monitoring check runs continuously.

3 **Ethernet Link / Activity** (Green)
These indicators show link status and activity on each of the Ethernet ports.

4 **Not used**

# 5.0 Communications interface

An electronic datasheet (EDS) is available for Ethernet/IP and PROFINET IO.

The EDS for the Ethernet/IP is embedded on the DLCA NET-SLIM and also available at *www.maxcessintl.com.*

The GSD file for PROFINET is available on the website.

## 5.1 Cyclic parameters

The cyclic parameters are available to read tension and status from the DLCA NET-SLIM and to send commands and parameters to the DLCA NET-SLIM.

RO = Read only
WO = Write only
uint16 = unsigned 16-bit integer
int32 = signed 32-bit integer
uint32 = unsigned 32-bit integer.

| Parameter | Data Type | Modbus Starting Index | Ethernet/IP | PROFINET IO |
|---|---|---|---|---|
| Input Data (Cyclic) | | | Refer to the electronic data sheets. | |
| Command Request | uint32 - WO | 0x01 | | |
| Command Request Parameter | uint32 - WO | 0x03 | | |
| | | | | |
| Output Data (Cyclic) | | | | |
| Command Response | uint32 - RO | 0x01 | | |
| Command Response Parameter | uint32 - RO | 0x03 | | |
| Tension 1 | int32 - RO | 0x05 | | |
| Tension 2 | int32 - RO | 0x07 | | |
| Tension Sum (T1+T2) | int32 - RO | 0x09 | | |
| Tension Diff (T1-T2) | int32 - RO | 0x0B | | |
| Security State | uint16 - RO | 0x0D | | |
| Status | uint16 - RO | 0x0E | | |
| Alarm | uint16 - RO | 0x0F | | |

**Note:** Cyclic data is transmitted on a periodic basis. The time interval is set by the field bus master.

## 5.2 Actual tension data

Tension is read from the DLCA NET-SLIM in the four cyclic parameters: Tension 1, Tension 2, Tension Sum, and Tension Difference.

The tension value is a 32-bit signed integer and is scaled to be 160 times the Maximum Tension value entered during calibration, ignoring the decimal point position set by parameter 0x207 or 0x217.

The tension reading will be at least 14-bit resolution when the maximum tension is three significant digits. Lower resolution will result if maximum tension is less than three significant digits.

**In a One Tension Zone amplifier**

Tension 1 is the value of tension read on channel 1.
Tension 2 is the value of tension read on channel 2.
Tension Sum is the summation of the tension on channels 1 and 2.
Tension Difference is the tension on channel 1 minus the tension on channel 2.

**In a Two Tension Zone amplifier**

Tension 1 is the value of tension read on channel 1.
Tension 2 is the value of tension read on channel 2.
Tension Sum and Tension Difference are always 0.

| Maximum Tension of the application in pounds | The number that should be entered at the DLCA NET as Maximum Tension during calibration | The value that will be transmitted when Maximum Tension is being measured (Max Tension entered X 160) | If Max Tension entered is a single digit, the PLC should be scaled to do a "floating point divide by 16,000" (100 X 160) | If Max Tension is two digits, the PLC should be scaled to do a "floating point divide by 1,600" (10 X 160) | If Max Tension entered is three or more digits, the PLC should be scaled to do a "floating point divide by 160" |
|---|---|---|---|---|---|
| 1 | 100 | 16,000 | 16,000 | - | - |
| 5 | 500 | 80,000 | 16,000 | - | - |
| 9 | 900 | 144,000 | 16,000 | - | - |
| 10 | 100 | 16,000 | - | 1,600 | - |
| 50 | 500 | 80,000 | - | 1,600 | - |
| 99 | 990 | 158,400 | - | 1,600 | - |
| 100 | 100 | 16,000 | - | - | 160 |
| 999 | 999 | 159,840 | - | - | 160 |
| 1,000 | 1,000 | 160,000 | - | - | 160 |
| 2,200 | 2,200 | 352,000 | - | - | 160 |
| 4,400 | 4,400 | 704,000 | - | - | 160 |
| 9,999 | 9,999 | 1,599,840 | - | - | 160 |
| 10,000 | 10,000 | 1,600,000 | - | - | 160 |

Examples of:

- Maximum Tension values and how they should be entered into the DLCA NET-SLIM, and
- How to scale a PLC or drive input to achieve 14 bit resolution at high or low tensions.

Figure 7. Examples - maximum tension values

## 5.3 Security state

The status of security is shown in the Security State cyclic parameter.

| Value | Status |
|---|---|
| 0 | System is unlocked and changes can be made. |
| 1 | System is locked and changes cannot be made. |

## 5.4 Status

The Status cyclic parameter shows power good, power failure errors, and load cell check errors.

The lower 8 bits show power good or the power error. The upper 8 bits show the type of load cell check error that occurred.

The load cell check only runs during power-up. The voltage monitoring check runs continuously.

Lower 8-bits:
0xXX00 = Power On, No Faults
0xXX01 = 5V power failure
0xXX02 = 12V power failure
0xXX04 = Load Cell power failure

Upper 8-bits
0x00XX = No Error
0x01XX = Sensor 1, white or black wire disconnected
0x02XX = Sensor 1, red wire disconnected
0x03XX = Sensor 1, green wire disconnected
0x04XX = Sensor 1, failure (check wiring or load cell damaged)
0x08XX = Sensor 2, white or black wire disconnected
0x10XX = Sensor 2, red wire disconnected
0x18XX = Sensor 2, green wire disconnected
0x20XX = Sensor 2, failure (check wiring or load cell damaged)

## 5.5 Alarm

The Alarm cyclic parameter shows the Alarm 1 and Alarm 2 state.

Bit 0 is the status of alarm 1.
Bit 1 is the status of alarm 2.

Bit = 0, Alarm OFF
Bit = 1, Alarm ON

## 5.6 Command interface

Commands are entered into the *Command Request* register. Parameters are read or written by a value in the *Command Request Parameter*. To write a parameter value, the value must be set in the Command Request Parameter before the Command Request is entered. See section 5.6.2 for all available commands and parameters.

After a *Command Request* has been entered the interface will respond with a reply in the *Command Response.* When reading a parameter the *Command Response Parameter* will contain the value of the parameter. See section 5.6.3 for the command response messages.

The *Command Response* will show a busy status while executing commands and once the command processing is complete, the *Command Response* will show either an error message or a completed message. Once the command has returned with either an error or completed message then a command of 0 must be sent in the *Command Request* before sending another command.

The commands are used to perform calibrations and zeroing of tension and also to get and set the value of the parameters in the DLCA NET-SLIM.

### 5.6.1 Command request

Commands start at 0x0 and continue to 0x1FF.
Parameters start at 0x200 and continue to 0x3FF.
For parameters, add 0x1000 for a Write and 0x0000 for a Read to the parameter number.

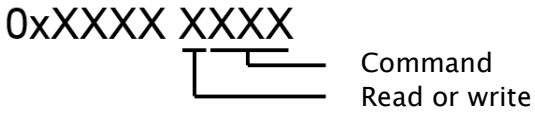


### 5.6.2 Command/parameter list

WO = Write Only, RO = Read only, RW = Read and Write

The parameter Class specifies which group this parameter belongs to in the DLCA NET-SLIM. The class can be communication (Comm), parameter (Parm), load cell calibration (LC Cal), or output calibration (Out Cal). This classification is used when resetting parameters to defaults with the NV Reset commands.

**Data types**

int16 = signed 16-bit integer
uint32 = unsigned 32-bit integer
int32 = signed 32-bit integer
float = 32-bit single precision floating point number

Some commands and parameters are not useful for the two tension zone DLCA NET-SLIM.

| Command/ Parameter Number | | Function or Parameter | Type | Class | Data Type and R/W | Explanation |
|---|---|---|---|---|---|---|
| Hex | Decimal | | | | | |
| 0x000 | 0 | Idle | Function | None | WO | |
| 0x001 | 1 | Zero Calibrate Zone 1 | Function | None | WO | See 7.1 or 7.2 |
| 0x002 | 2 | Precision Calibrate Zone 1 | Function | None | WO | See 7.1 |
| 0x003 | 3 | Weightless Calibrate Zone 1 | Function | None | WO | See 7.1 |
| 0x004 | 4 | Zero Calibrate Zone 2 | Function | None | WO | See 7.1 or 7.2 |
| 0x005 | 5 | Precision Calibrate Zone 2 | Function | None | WO | See 7.2 |
| 0x006 | 6 | Weightless Calibrate Zone 2 | Function | None | WO | See 7.2 |
| 0x007 | 7 | Cal Output 0, 10V, 0% | Function | None | WO | N/A on SLIM |
| 0x008 | 8 | Cal Output 0, 10V, 100% | Function | None | WO | N/A on SLIM |
| 0x009 | 9 | Cal Output 0, 20mA, 0% | Function | None | WO | N/A on SLIM |
| 0x00A | 10 | Cal Output 0, 20mA, 100% | Function | None | WO | N/A on SLIM |
| 0x00B | 11 | Cal Output 1, 10V, 0% | Function | None | WO | N/A on SLIM |
| 0x00C | 12 | Cal Output 1, 10V, 100% | Function | None | WO | N/A on SLIM |
| 0x00D | 13 | Cal Output 1, 20mA, 0% | Function | None | WO | N/A on SLIM |

| Command/ Parameter Number | | Function or Parameter | Type | Class | Data Type and R/W | Explanation |
|---|---|---|---|---|---|---|
| 0x00E | 14 | Cal Output 1, 20mA, 100% | Function | None | WO | N/A on SLIM |
| 0x00F | 15 | Cal Output 2, 10V, 0% | Function | None | WO | N/A on SLIM |
| 0x010 | 16 | Cal Output 2, 10V, 100% | Function | None | WO | N/A on SLIM |
| 0x011 | 17 | Cal Output 2, 20mA, 0% | Function | None | WO | N/A on SLIM |
| 0x012 | 18 | Cal Output 2, 20mA, 100% | Function | None | WO | N/A on SLIM |
| 0x013 | 19 | Cal Output Meter, 1mA, 0% | Function | None | WO | N/A on SLIM |
| 0x014 | 20 | Cal Output Meter, 1mA, 100% | Function | None | WO | N/A on SLIM |
| 0x015 | 21 | Cal Output Meter 2, 1mA, 0% | Function | None | WO | N/A on SLIM |
| 0x016 | 22 | Cal Output Meter 2, 1mA, 100% | Function | None | WO | N/A on SLIM |
| 0x017 | 23 | Password 1 Entry | Parameter | None | WO – int16 | See 5.7.1 |
| 0x018 | 24 | Password 2 Entry | Parameter | None | WO – int16 | See 5.7.1 |
| 0x019 | 25 | Reset NV Parameters Only | Function | None | WO | See 5.7.2 |
| 0x01A | 26 | Reset NV Load Cell Calibrations Only | Function | None | WO | See 5.7.2 |
| 0x01B | 27 | Reset NV Output Calibrations Only | Function | None | WO | See 5.7.2 |
| 0x01C | 28 | Reset NV Communications Only | Function | None | WO | See 5.7.2 |
| 0x01D | 29 | Reset NV All | Function | None | WO | See 5.7.2 |
| 0x01E | 30 | Zero Tension Zone 1 | Function | None | WO | See 5.7.3 |
| 0x01F | 31 | Zero Tension Zone 2 | Function | None | WO | See 5.7.3 |
| 0x20 | 32 | Reset Processor | Function | None | WO | See 5.7.4 |
| | | | | | | |
| | | **Configuration Hardware** | | | | |
| 0x200 | 512 | Zero Tension Lock Active | Parameter | Parm | RW – int16 | See 6.3 |
| 0x201 | 513 | Load Cell Excitation Voltage | Parameter | LC Cal | RW – int16 | See 6.3 |
| 0x202 | 514 | Digital Input Level Select | Parameter | Parm | RW – int16 | N/A on SLIM |
| 0x203 | 515 | Which Sensor Inputs Used | Parameter | LC Cal | RW – int16 | See 6.3 |
| 0x204 | 516 | Product Type | Parameter | None | RO – int16 | See 6.3 |
| 0x205 | 517 | Program Version | Parameter | None | RO – int16 | See 6.3 |
| 0x206 | 518 | Program Number | Parameter | None | RO – int32 | See 6.3 |
| | | | | | | |
| | | **Configuration Tension 1 (Tension Zone 1)** | | | | |
| 0x207 | 519 | DP Position | Parameter | Parm | RW – int16 | See 7.0 |
| 0x208 | 520 | ADC PGA Gain | Parameter | LC Cal | RW – int16 | See 7.0 |
| 0x209 | 521 | Tension 1A Zero Offset | Parameter | LC Cal | RW – int32 | See 7.0 |
| 0x20A | 522 | Tension 1B Zero Offset | Parameter | LC Cal | RW – int32 | See 7.0 |
| 0x20B | 523 | Tension 1A Normalization | Parameter | LC Cal | RW – float | See 7.0 |
| 0x20C | 524 | Tension 1B Normalization | Parameter | LC Cal | RW – float | See 7.0 |
| 0x20D | 525 | Cal Tension | Parameter | LC Cal | RW – int32 | See 7.0 |
| 0x20E | 526 | Tension Scale | Parameter | LC Cal | RW – int32 | See 7.0 |
| 0x20F | 527 | Tension Number Format | Parameter | LC Cal | RW – int16 | See 7.0 |
| 0x210 | 528 | Tension Filter Frequency | Parameter | Parm | RW – uint16 | See 6.1 |
| 0x211 | 529 | Maximum Tension | Parameter | LC Cal | RW – int32 | See 7.0 |
| 0x212 | 530 | Load Cell Rating | Parameter | LC Cal | RW – int32 | See 7.0 |
| 0x213 | 531 | Wrap Angle | Parameter | LC Cal | RW – int16 | See 7.0 |

| Command/ Parameter Number | | Function or Parameter | Type | Class | Data Type and R/W | Explanation |
|---|---|---|---|---|---|---|
| 0x214 | 532 | Angle From Force Direction | Parameter | LC Cal | RW – int16 | See 7.0 |
| 0x215 | 533 | Load Cell Sensitivity | Parameter | LC Cal | RW – int16 | See 7.0 |
| 0x216 | 534 | Tension Polarity | Parameter | LC Cal | RW – int16 | See 7.0 |
| | | | | | | |
| | | **Configuration Tension 2 (Tension Zone 2)** | | | | |
| 0x217 | 535 | DP Position | Parameter | Parm | RW – int16 | See 7.0 |
| 0x218 | 536 | ADC PGA Gain | Parameter | LC Cal | RW – int16 | See 7.0 |
| 0x219 | 537 | Tension Zero Offset | Parameter | LC Cal | RW – int32 | See 7.0 |
| 0x21A | 538 | Cal Tension | Parameter | LC Cal | RW – int32 | See 7.0 |
| 0x21B | 539 | Tension Scale | Parameter | LC Cal | RW – int32 | See 7.0 |
| 0x21C | 540 | Tension Number Format | Parameter | LC Cal | RW – int16 | See 7.0 |
| 0x21D | 541 | Tension Filter Frequency | Parameter | Parm | RW – uint16 | See 6.1 |
| 0x21E | 542 | Maximum Tension | Parameter | LC Cal | RW – int32 | See 7.0 |
| 0x21F | 543 | Load Cell Rating | Parameter | LC Cal | RW – int32 | See 7.0 |
| 0x220 | 544 | Wrap Angle | Parameter | LC Cal | RW – int16 | See 7.0 |
| 0x221 | 545 | Angle From Force Direction | Parameter | LC Cal | RW – int16 | See 7.0 |
| 0x222 | 546 | Load Cell Sensitivity | Parameter | LC Cal | RW – int16 | See 7.0 |
| 0x223 | 547 | Tension Polarity | Parameter | LC Cal | RW – int16 | See 7.0 |
| | | | | | | |
| | | **Configuration Alarm 1** | | | | |
| 0x224 | 548 | Tension Zone | Parameter | Parm | RW – int16 | See 6.2 |
| 0x225 | 549 | Activation Type | Parameter | Parm | RW – int16 | See 6.2 |
| 0x226 | 550 | High Value | Parameter | Parm | RW – int32 | See 6.2 |
| 0x227 | 551 | Low Value | Parameter | Parm | RW – int32 | See 6.2 |
| 0x228 | 552 | Hysteresis Percent | Parameter | Parm | RW – int16 | See 6.2 |
| 0x229 | 553 | On Delay Time | Parameter | Parm | RW – int16 | See 6.2 |
| 0x22A | 554 | Off Delay Time | Parameter | Parm | RW – int16 | See 6.2 |
| | | | | | | |
| | | **Configuration Alarm 2** | | | | |
| 0x22B | 555 | Tension Zone | Parameter | Parm | RW – int16 | See 6.2 |
| 0x22C | 556 | Activation Type | Parameter | Parm | RW – int16 | See 6.2 |
| 0x22D | 557 | High Value | Parameter | Parm | RW – int32 | See 6.2 |
| 0x22E | 558 | Low Value | Parameter | Parm | RW – int32 | See 6.2 |
| 0x22F | 559 | Hysteresis Percent | Parameter | Parm | RW – int16 | See 6.2 |
| 0x230 | 560 | On Delay Time | Parameter | Parm | RW – int16 | See 6.2 |
| 0x231 | 561 | Off Delay Time | Parameter | Parm | RW – int16 | See 6.2 |
| | | | | | | |
| | | **Output 1** | | | | |
| 0x232 | 562 | 0 to 10V Zero Offset | Parameter | Out Cal | RW – int16 | N/A on SLIM |
| 0x233 | 563 | 0 to 10V Gain | Parameter | Out Cal | RW – int16 | N/A on SLIM |
| 0x234 | 564 | 0 to 10V Zero Offset User | Parameter | Parm | RW – int16 | N/A on SLIM |
| 0x235 | 565 | 0 to 10V High Limit User | Parameter | Parm | RW – int16 | N/A on SLIM |
| 0x236 | 566 | 0 to 20mA Zero Offset | Parameter | Out Cal | RW – int16 | N/A on SLIM |
| 0x237 | 567 | 0 to 20mA Gain | Parameter | Out Cal | RW – int16 | N/A on SLIM |

| Command/ Parameter Number | | Function or Parameter | Type | Class | Data Type and R/W | Explanation |
|---|---|---|---|---|---|---|
| 0x238 | 568 | 0 to 20mA Zero Offset User | Parameter | Parm | RW – int16 | N/A on SLIM |
| 0x239 | 569 | 0 to 20mA High Limit User | Parameter | Parm | RW – int16 | N/A on SLIM |
| 0x23A | 570 | Output Filter Frequency | Parameter | Parm | RW – uint16 | N/A on SLIM |
| | | | | | | |
| | | Output 2 | | | | |
| 0x23B | 571 | 0 to 10V Zero Offset | Parameter | Out Cal | RW – int16 | N/A on SLIM |
| 0x23C | 572 | 0 to 10V Gain | Parameter | Out Cal | RW – int16 | N/A on SLIM |
| 0x23D | 573 | 0 to 10V Zero Offset User | Parameter | Parm | RW – int16 | N/A on SLIM |
| 0x23E | 574 | 0 to 10V High Limit User | Parameter | Parm | RW – int16 | N/A on SLIM |
| 0x23F | 575 | 0 to 20mA Zero Offset | Parameter | Out Cal | RW – int16 | N/A on SLIM |
| 0x240 | 576 | 0 to 20mA Gain | Parameter | Out Cal | RW – int16 | N/A on SLIM |
| 0x241 | 577 | 0 to 20mA Zero Offset User | Parameter | Parm | RW – int16 | N/A on SLIM |
| 0x242 | 578 | 0 to 20mA High Limit User | Parameter | Parm | RW – int16 | N/A on SLIM |
| 0x243 | 579 | Output Filter Frequency | Parameter | Parm | RW – uint16 | N/A on SLIM |
| | | | | | | |
| | | Output 3 | | | | |
| 0x244 | 580 | 0 to 10V Zero Offset | Parameter | Out Cal | RW – int16 | N/A on SLIM |
| 0x245 | 581 | 0 to 10V Gain | Parameter | Out Cal | RW – int16 | N/A on SLIM |
| 0x246 | 582 | 0 to 10V Zero Offset User | Parameter | Parm | RW – int16 | N/A on SLIM |
| 0x247 | 583 | 0 to 10V High Limit User | Parameter | Parm | RW – int16 | N/A on SLIM |
| 0x248 | 584 | 0 to 20mA Zero Offset | Parameter | Out Cal | RW – int16 | N/A on SLIM |
| 0x249 | 585 | 0 to 20mA Gain | Parameter | Out Cal | RW – int16 | N/A on SLIM |
| 0x24A | 586 | 0 to 20mA Zero Offset User | Parameter | Parm | RW – int16 | N/A on SLIM |
| 0x24B | 587 | 0 to 20mA High Limit User | Parameter | Parm | RW – int16 | N/A on SLIM |
| 0x24C | 588 | Output Filter Frequency | Parameter | Parm | RW – uint16 | N/A on SLIM |
| | | | | | | |
| | | Meter Output | | | | |
| 0x24D | 589 | 0 to 1mA Zero Offset 1 | Parameter | Out Cal | RW – int16 | N/A on SLIM |
| 0x24E | 590 | 0 to 1mA Gain 1 | Parameter | Out Cal | RW – int16 | N/A on SLIM |
| 0x24F | 591 | 0 to 1mA Zero Offset User 1 | Parameter | Parm | RW – int16 | N/A on SLIM |
| 0x250 | 592 | 0 to 1mA High Limit User 1 | Parameter | Parm | RW – int16 | N/A on SLIM |
| 0x251 | 593 | Meter Output Filter Frequency | Parameter | Parm | RW – uint16 | N/A on SLIM |
| 0x252 | 594 | 0 to 1mA Zero Offset 2 | Parameter | Out Cal | RW – int16 | N/A on SLIM |
| 0x253 | 595 | 0 to 1mA Gain 2 | Parameter | Out Cal | RW – int16 | N/A on SLIM |
| 0x254 | 596 | 0 to 1mA Zero Offset User 2 | Parameter | Parm | RW – int16 | N/A on SLIM |
| 0x255 | 597 | 0 to 1mA High Limit User 2 | Parameter | Parm | RW – int16 | N/A on SLIM |
| | | | | | | |
| | | Communication | | | | |
| 0x256 | 598 | IP Address | Parameter | Comm | RW – uint32 | See 6.3 / 5.7.4 |
| 0x257 | 599 | Subnet Mask | Parameter | Comm | RW – uint32 | See 6.3 / 5.7.4 |
| 0x258 | 600 | Communication Tension Filtered | Parameter | Parm | RW – int16 | See 6.1 |
| 0x259 | 601 | Communications Type | Parameter | Comm | RW – int16 | See 6.3 / 5.7.4 |
| 0X25A | 602 | Web Page Refresh Rate | Parameter | Parm | RW – uint32 | See 8.0 |

### 5.6.3 Command response

A command response will be returned in the *Command Response* register.

The response consists of a message type, an error or message number and the request command code all OR'ed together. When reading a parameter the value of the parameter will be returned in the *Command Response Parameter* register. The *Command Response Parameter* is an uint32; you will need to cast this to the appropriate data type for the parameter as listed in the command/parameter chart in section 5.6.2

**Command response register**

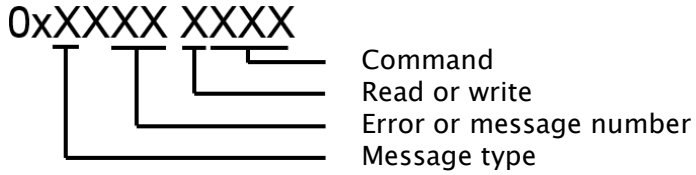


**The Message type can be one of the following:**
0x0XXX XXXX = Idle
0x1XXX XXXX = Complete, no errors
0x2XXX XXXX = Error
0x4XXX XXXX = Message
0x8XXX XXXX = Busy

**The Error number can be one of the following:**
0xXX00 XXXX = No Error
0xXX01 XXXX = Signal too large at maximum tension
0xXX02 XXXX = Signal too small
0xXX03 XXXX = Roll Weight exceeds 90 percent of ADC value
0xXX04 XXXX = Calibration tension greater than maximum tension
0xXX05 XXXX = Maximum tension exceeds load cell rating
0xXX06 XXXX = not used
0xXX07 XXXX = not used
0xXX08 XXXX = Another command is running
0xXX09 XXXX = Invalid command request
0xXX0A XXXX = Not Displaying Tension
0xXX0B XXXX = Passwords not equal
0xXX0C XXXX = Passwords do not match stored password or backdoor
0xXX0D XXXX = System Locked by password
0xXX0E XXXX = Invalid password, range = 0 – 9999
0xXX0F XXXX = Parameter not in range

## 5.7 Function information

This section describes how the functions are used.

### 5.7.1 Security

The DLCA NET-SLIM can be locked out to prevent parameter changes and calibrations from being performed.

**Setting or clearing security**

To set or clear the security state, two identical passwords must be entered using the command Password 1 Entry and Password 2 Entry.

1. Enter the password into the *Command Request Parameter* register and enter the command 0x17 (Password 1 Entry) in the *Command Request* register. A response of 0x4003 0017 will be returned in the *Command Response Parameter* register showing a message that only one password has been entered.
2. Enter the same password in the *Command Request Parameter* register and enter the command 0x18 (Password 2 Entry) in the *Command Request* register. A response of 0x40010018 will be returned showing a message that the system has been locked or unlocked in the *Command Response Parameter*.

This same procedure needs to be executed to unlock the system. When the system is unlocked the returned message will be 0x40020018. If the passwords entered do not match, or the passwords do not match the stored password used to lock the system, an error message will be returned.

The password range is from 0000 to 9999.

An attempt to change a parameter or execute a calibration while the system is locked will return an error message stating the System Locked by Password 0x200D00xx.

The factory back door password is 6195.

### 5.7.2 Reset non-volatile (NV) memory to defaults

These commands will reset the specified parameters to factory defaults.

| Command | Function | Explanation |
|---|---|---|
| 0x019 | Reset NV Parameters Only | Reset parameters belonging to the Parameter class. |
| 0x01A | Reset NV Load Cell Calibrations Only | Reset parameters belonging to the Load Cell Calibration class. |
| 0x01B | Reset NV Output Calibrations Only | Reset parameters belonging to the Output Calibration class. |
| 0x01C | Reset NV Communications Only | Reset parameters belonging to the Communication class. |
| 0x01D | Reset NV All | Reset all the parameters. |

### 5.7.3 Zeroing the tension

The tension can be zeroed by entering the command Zero Tension Zone 1 (0x01E) or Zero Tension Zone 2 (0x01F).

### 5.7.4 Reset Processor

For changes to take effect, the processor must be reset after changing the IP Address, Subnet Mask, or Communications Type.

## 5.8 Get or set parameters

### 5.8.1 Get a parameter

To get the value of a parameter, enter the parameter number in the *Command Request. The Command Response Parameter* returned will contain the value of the parameter.

### 5.8.2 Set a parameter

To set the value of a parameter, enter the value of the parameter into the *Command Request Parameter.* Then enter the parameter number OR'ed with 0x1000 (Write) into the *Command Request.* The *Command Response* returned will be either success or an error code. A common reason for getting an error is the value is not in range.

# 6.0 Parameters

This section describes the parameters available in the DLCA NET-SLIM.

## 6.1 Filtering

The tension zone displays have a separate low pass filter. The communication tension values can use either the tension display filter or have no filtering.

The tension display filter response can be set from 500 Hz to 0.01 Hz.

The filters are a second order low pass filter for frequencies from 0.01 Hz to 124.99 Hz.

Above 125 Hz, an average of samples is used for the filter, as defined in this table.

| Frequency (Hz) | averages used |
|---|---|
| 125.00 to 166.66 | Four samples |
| 166.67 to 249.99 | Three samples |
| 250.00 to 499.99 | Two samples |
| 500.00 | There is no filter; current sample data is used |

| Parameter | Description | Units | Default | Range |
|---|---|---|---|---|
| 0x210 | Tension 1 display filter frequency | 0.01 Hz | 3.00 | {00.01, 500.00} |
| 0x21D | Tension 2 display filter frequency | 0.01 Hz | 3.00 | {00.01, 500.00} |
| 0x258 | Filter Communication Tension<br>0 = no filtering on communication tension values.<br>1 = use display filter frequency on communication tension values. | | 0 | {0, 1} |

## 6.2 Alarm setup and operation

The following parameters describe the setup and operation of the alarms.

| Parameter | Description | Units | Default | Range |
|---|---|---|---|---|
| 0x224<br>0x22B | Tension Channel/Zone used for alarm<br>SLIM1<br>0 = Channel 1<br>1 = Channel 2<br>2 = Tension Sum<br>SLIM2<br>0 = Tension Zone 1<br>1 = Tension Zone 2 | | 0 | SLIM1<br>{0, 2}<br><br>SLIM2<br>{0, 1} |
| 0x225<br>0x22C | Alarm activation type<br>0 = Alarm ON when tension is above the alarm high compare value.<br>1 = Alarm ON when tension is below the alarm low compare value.<br>2 = Alarm ON when tension is either above the alarm high compare value or below the alarm low compare value.<br>3 = Alarm ON when tension is below the Alarm high compare value and above the alarm low compare value. | | 0 | {0, 3} |
| 0x226<br>0x22D | Alarm high compare value | 1 | 500 | {0, 999000} |
| 0x227<br>0x22E | Alarm low compare value | 1 | 0 | {0, 999000} |
| 0x228<br>0x22F | Alarm hysteresis percent. Hysteresis percent is a percentage of maximum tension. | 0.01% | 0 | {0, 9999} |
| 0x229<br>0x230 | Alarm ON delay time. (The alarm ON output is delay by this number of seconds.) | 0.01 s | 0 | {0, 9999} |
| 0x22A<br>0x231 | Alarm OFF delay time. (The alarm OFF output is delay by this number of seconds.) | 0.01 s | 0 | {0, 9999} |

### 6.2.1 Alarm operation with hysteresis

**Alarm activation type 0**

Alarm turns on when tension is greater than High value.
Alarm turns off when tension is less than
(HighValue – (HysteresisPercent * Maximum Tension))

**Alarm activation type 1**

Alarm turns on when tension is less than Low value.
Alarm turns off when tension is greater than
(LowValue + (HysteresisPercent * MaximumTension))

**Alarm activation type 2**

Alarm turns on when tension is greater than High value or less than Low value.
Alarm turns off when tension is less than
(HighValue – (HysteresisPercent * MaximumTension))
and when tension is greater than
(LowValue + (HysteresisPercent * MaximumTension))

**Alarm activation type 3**

Alarm output is the complement of alarm activation type 2.

## 6.3 Hardware configuration parameters

These parameters configure the hardware or provide information about the hardware.

| Parameter | Description | Default |
|---|---|---|
| 0x200 | **Zero Tension Lock**<br>Issuing a Zero Tension Zone 1 or Zone 2 command will immediately zero the tension value.<br>The zeroing of tension can be allowed or not when the security state is locked.<br>0 = Zeroing tension allowed when security state is locked.<br>1 = Zeroing tension is not allowed when security state is locked. | 0 |
| 0x201 | **Load Cell Excitation Voltage**<br>The load cell excitation voltage can be set to 5V or 7.5V.<br>0 = 5V (use with non-MAGPOWR load cells with 5V excitation)<br>1 = 7.5V (always use with MAGPOWR load cells) | 1 |
| 0x202 | **Digital Input Level Select**<br>Sets the threshold for the digital inputs for either 5V or 24V logic.<br>0 = 5V logic threshold<br>1 = 24V logic threshold<br>When set for 5V, the threshold between on and off is 2.5 volts with 20% hysteresis.<br>When set for 24V, the threshold between on and off is 12 volts with 20% hysteresis.<br>(Not used on the DLCA NET-SLIM or DLCA NET-IP65) | 1 |
| 0x203 | **Which Sensor Inputs Used**<br>This selects which sensor inputs are being used. If only channel 1 is being used, the load cell check at power-up will fail because no load cell is connected to channel 2. To prevent this failure indication, this parameter tells software to only check channel 1.<br>This parameter is also used during tension calibrations.<br>0 = Only channel 1 used<br>1 = Both channels used | 1 |

| | | | |
|---|---|---|---|
| 0x259 | **Communications Type**<br>Selects the fieldbus type.<br>0 = Modbus TCP<br>1 = Ethernet/IP<br>2 = PROFINET IO | *Reset processor is required for changes to take effect. Command 0x20.* | 0 |
| 0x256 | **IP Address**<br>Set the IP address. | *Reset processor is required for changes to take effect. Command 0x20.* | 10.0.0.113 |
| 0x257 | **Subnet Mask**<br>Set the Subnet Mask. | *Reset processor is required for changes to take effect. Command 0x20.* | 255.0.0.0 |
| 0x204 | **Product Type**<br>Indicates the product model of this hardware.<br>1 = DLCA NET1<br>2 = DLCA NET2<br>3 = DLCA NET-SLIM1<br>4 = DLCA NET-SLIM2<br>5 = DLCA NET-IP651<br>6 = DLCA NET-IP652 | | Set by factory |
| 0x205 | **Program Version**<br>The current version of software in this product | | Set by factory |
| 0x206 | **Program Number**<br>The current program number of the software in this product | | Set by factory |

# 7.0 Calibration

The DLCA NET-SLIM has two modes of calibration: Precision and Weightless. Precision calibration is used when applying a known weight with a rope in the web path to the load cells for calibration. Typically this known weight should be 10% of the load cell rating or greater. Weightless calibration is used when a known weight is not convenient or desired.

The *Command Interface* is used to perform the calibrations. A command request is entered in the *Command Request*. The *Command Response* will show the progress of the command and when the command is complete. Errors will also be shown.

Parameters for Tension Zone 1 can be accessed in the group *Configuration Tension 1* and those for Tension Zone 2 can be accessed in the group *Configuration Tension 2*.

**Procedures**

Precision calibration; page 35
Weightless calibration; page 38

## 7.1 Precision calibration procedure

To get full 14-bit resolution, you must use three significant digits when entering calibration weight. See the chart for entering Maximum Tension in Section 5.2.

Enter values into the calibration parameters shown below. These parameters are available for Tension Zone 1 and Tension Zone 2.

| Parameter | Name and description | Default | Range |
|---|---|---|---|
| 0x207<br>0x217 | Decimal Point Position<br>Sets the decimal point position for the tension display.<br>0 = 000000<br>1 = 000000.<br>2 = 00000.0<br>3 = 0000.00<br>4 = 000.000<br>5 = 00.0000<br>6 = 0.00000 | 0 | {0, 6} |
| 0x20D<br>0x21A | Calibration Tension<br>Calibration tension is the force of the known weight hanging on the rope over the load cells. | 500 | {0, 999000} |
| 0x211<br>0x21E | Maximum Tension<br>This is the maximum tension expected for the application. Do not exceed the rating of the load cells. | 500 | {0, 999000} |

Set the Load Cell Excitation Voltage 0x201 and Which Sensor Inputs are used 0x203. See section 6.3.

*Precision calibration procedure continued*

When performing a calibration, both the zero and precision calibrate steps must be done in sequence before a calibration is valid.

If only zeroing the tension is required, use the 0x1E or 0x1F command.

1. Unload the load cell(s) for Tension Zone 1.
2. Enter the command 0x01 (Zero Calibrate Zone 1) in the ***Command Request*** register. The DLCA NET-SLIM immediately responds with 0x8000 0001 (Busy) in the ***Command Response***.

   If the calibrate zero is successful, the DLCA NET-SLIM will respond with 0x1000 0001 after ten to twenty seconds. If not, an error message will be returned 0x20XX 0001.
3. Clear the ***Command Request*** register by entering the command 0x00.
4. Hang the known weight and rope over the load cell(s) in Tension Zone 1; see Figure 8.
5. Enter the command 0x02 (Precision Calibrate Zone 1) in the ***Command Request***. The DLCA NET-SLIM immediately responds with 0x8000 0002 (Busy) in the ***Command Response***.

   If the calibrate precision is successful, the DLCA NET-SLIM will respond with 0x1000 0002 after ten to twenty seconds. If not, an error message will be returned 0x20XX 0002.
6. Clear the ***Command Request*** register by entering the command 0x00.

   Clearing the command request is necessary to prevent starting multiple calibrations, such as zero and precision, before the first entered request is finished.

   Precision Calibration is now complete.

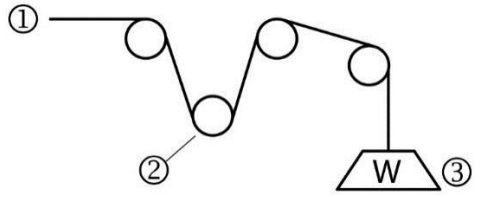


1 – Temporary web
2 – Sensing roll
3 – Weight (W)

Figure 8. Apply calibration tension

*Precision calibration procedure continued*

If the calibration is successful, then ***Tension Polarity*** (0x216 or 0x223) will automatically be set to show positive tension when force is applied in the direction of the calibration force.

The following parameters in the group ***Configuration Tension 1*** or ***Configuration Tension 2*** are set by the calibration procedure:

| Parameter | Name | Default | Range |
|---|---|---|---|
| 0x208 or 0x218 | ADC PGA Gain 1 | 5 | {0, 7} |
| 0x209 or 0x219 | Display Tension 1A Zero Offset | 0 | {-0xFFFFFF, 0xFFFFFF} |
| 0x20A | Display Tension 1B Zero Offset (SLIM1 only) | 0 | {-0xFFFFFF, 0xFFFFFF} |
| 0x20B | Tension 1A Normalization (SLIM1 only) | 1.0 | {-FLT_MAX, FLT_MAX} |
| 0x20C | Tension 1B Normalization (SLIM1 only) | 1.0 | {-FLT_MAX, FLT_MAX} |
| 0x20E or 0x21B | Display Tension 1 Scale | 623 | {0, 999000} |
| 0x20F or 0x21C | Display Tension 1 Number Format | 0x10 | {0, 0xFF} |
| 0x216 or 0x223 | Tension Polarity<br>0 = -1<br>1 = +1 | 1 | {0, 1} |

The above parameter set is determined by the DLCA NET-SLIM during calibration. Do not modify the value of these parameters. The parameters above, along with those in the following list, can be read from a DLCA NET-SLIM and can be sent to the same DLCA NET-SLIM to restore a corrupted calibration if needed.

Decimal Point Position
Maximum Tension
Calibration Tension
Load Cell Excitation Voltage
Which Sensor Inputs Used

Tension Zone 2 can be calibrated in the same way by substituting the commands 0x04 (Zero Zone 2) and 0x05 (Precision Zone 2) when performing a calibration.

## 7.2 Weightless calibration procedure

Enter values into the calibration parameters shown below. Refer to Figure 9 for the meaning of wrap angle and angle from force direction.

| Parameter | Name and description | Default | Range |
|---|---|---|---|
| 0x207<br>0x217 | Decimal Point Position<br>Sets the decimal point position for the tension display.<br>0 = 000000<br>1 = 000000.<br>2 = 00000.0<br>3 = 0000.00<br>4 = 000.000<br>5 = 00.0000<br>6 = 0.00000 | 0 | {0, 6} |
| 0x211 or 0x21E | Maximum Tension<br>This is the maximum tension expected for the application. Do not exceed the rating of the load cells. | 500 | {0, 999000} |
| 0x212 or 0x21F | Load Cell Rating<br>Enter the load cell(s) combined maximum force rating. | 500 | {0, 999000} |
| 0x213 or 0x220 | Web Wrap Angle (units 0.1 degrees)<br>This is the angle over which the web touches the idler roller. To enter 10.0 degrees, enter the value of 100. | 600 | {1, 1800} |
| 0x214 or 0x221 | Angle From Force Direction (units 0.1 degrees)<br>This is the angle between the resultant force from the web tension and the force direction arrow of the load cell or the centerline of the load cell. The maximum value is 45.0 degrees. To enter 10.0 degrees, enter value of 100. | 0 | {0, 450} |
| 0x215 or 0x222 | Load Cell Sensitivity (units 0.1 mV/V)<br>Enter the load cell sensitivity in mV/V. MAGPOWR load cells have a sensitivity of 2.1 mV/V. To enter 2.1 enter value of 21. | 21 | {0, 1000} |

Set the Load Cell Excitation Voltage 0x201 and Which Sensor Inputs are used 0x203. See section 6.3.

*Weightless calibration procedure continued*

When performing a calibration both the zero and WEIGHTLESS calibrate steps must be done in sequence before a calibration is valid.

If only zeroing the tension is required use the 0x1E or 0x1F command.

1. Unload the load cell(s) for Tension Zone 1.
2. Enter the command 0x01 (Zero Calibrate Zone 1) in the ***Command Request.*** The DLCA NET-SLIM immediately responds with 0x8000 0001 (Busy) in the ***Command Response***.

   If the calibrate zero is successful, the DLCA NET-SLIM will respond after ten to twenty seconds with 0x1000 0001. Otherwise, error message 0x20XX 0001 will be returned.
3. Clear the ***Command Request*** by entering the command 0x00.
4. Enter the command 0x03 (Weightless Calibrate Zone 1) in the ***Command Request***. The DLCA NET-SLIM will immediately respond with success message 0x1000 0003 *or* error message 0x20XX 0003 in the ***Command Response***.
5. Clear the **Command Request** register by entering the command 0x00.

   Clearing the command request is necessary to prevent starting multiple calibrations, such as zero and precision, before the first entered request is finished.

Weightless Calibration is complete.

If the returned tension values in the cyclic data are negative, you will need to manually set the *Tension Polarity* parameter (0x216 or 0x223) so that the tension values are positive.

The following parameters in the group *Configuration Tension 1* or *Configuration Tension 2* are set by the calibration procedure.

| Parameter | Name | Default | Range |
|---|---|---|---|
| 0x208 or 0x218 | ADC PGA Gain 1 | 5 | {0, 7} |
| 0x209 or 0x219 | Display Tension 1A Zero Offset | 0 | {-0xFFFFFF, 0xFFFFFF} |
| 0x20A | Display Tension 1B Zero Offset (SLIM1 only) | 0 | {-0xFFFFFF, 0xFFFFFF} |
| 0x20E or 0x21B | Display Tension 1 Scale | 623 | {0, 0x7FFFFFFF} |
| 0x20F or 0x21C | Display Tension 1 Number Format | 0x10 | {0, 0xFF} |

The above parameter set is determined by the DLCA NET-SLIM during calibration. Do not modify the value of these parameters. The parameters above, along with those in the following list, can be read from a DLCA NET-SLIM and can be sent to the same DLCA NET-SLIM to restore a corrupted calibration if needed.

Decimal Point Position
Maximum Tension
Load Cell Rating
Web Wrap Angle
Angle from Force Direction
Load Cell Sensitivity
Tension Polarity
Load Cell Excitation Voltage
Which Sensor Inputs Used

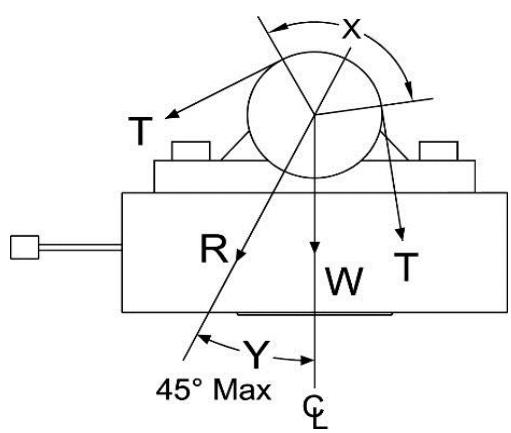


T = Web Tension
W = Roller weight
R = Resultant force from web tension
X = Web Wrap Angle
Y = Angle from resultant force direction

Figure 9. Weightless calibration angles

## 7.3 Calibration errors returned

| Value | Error description and solution |
|---|---|
| 0x00 | Calibration was successful. No Errors found. |
| 0x01 | Signal read by the amplifier is too large when Maximum Tension is applied. This is caused by Maximum Tension being too large. Reduce Maximum Tension. |
| 0x02 | Signal read by the amplifier is too small. Too little of the load cell range is being used, thus the gain is greater than 32:1. Use more of the load cell range or set Maximum Tension higher. |
| 0x03 | Roller weight too large. Roller weight exceeds 90% of the load cell rating. Make roller weight smaller. |
| 0x04 | Calibration Tension is greater than Maximum Tension. Make Maximum Tension larger than Calibration Tension. |
| 0x05 | Maximum Tension exceeds the load cell rating. Try lower wrap angle, make roll weight smaller, get higher rated load cells. |

Table 1. Calibration errors

# 8.0 Web server access

With web server access, you can view a web page for your DLCA NET device that displays current values and provides links to other pages where you can perform calibrations or edit parameters. See page 43.

An Ethernet connection must be made to Ethernet Port 2 only. The DLCANET-SLIM must be disconnected from the EtherCAT network and then power must be cycled.

The DLCANET-SLIM will allow non-EtherCAT traffic on Ethernet Port 2 after restarting as long as no EtherCAT traffic is detected on either Ethernet port.

## 8.1 Confirm web server access

1. Connect the DLCA NET-SLIM to the computer and verify that you can access it through a web browser.
2. In the web browser, type in 10.0.0.113 — or the IP address assigned to the DLCA NET device if it has been reconfigured.

The DLCA NET web server page will open, which confirms that you have access.

**If it does not, you will need to adjust the network adapter.**

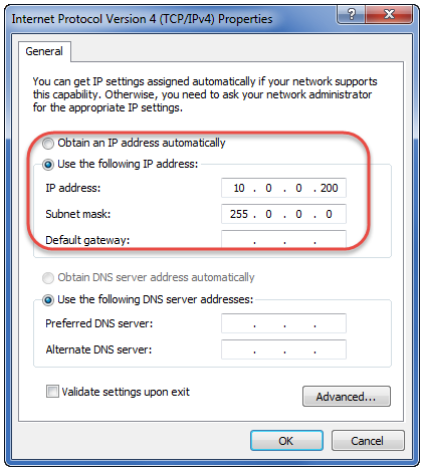


1. Go to your computer *Control Panel* > *Network and Sharing*; and then select *Network Adapter* > *Properties*.
2. Select *Internet Protocol Version 4 TCP/IP Rv4* > *Properties.*
3. Select ⊙**Use the following IP address:**
   a. Enter IP address 10.0.0.200.
   b. Set the subnet address to 255.0.0.0.
4. Close the control panel and browser.
5. Reopen the browser and type in 10.0.0.113; the web server page should now appear.

## 8.2 Web pages

Use the links in the left menu area to access other pages where you can view and edit parameters or perform calibration.

The tension is displayed as a real number with the decimal point position included from parameter 0x207 and 0x217.

MAXCESS MAGPOWR

**DLCA NET**

Status
Security
Hardware
Tension Zone 1
Alarm 1
Alarm 2
Commands 1
Commands 3

**Status**

| Parameter Name | Value | Units | Parameter Class |
|---|---|---|---|
| Web Page Refresh Rate | 5000 | milliseconds | Parm |
| Actual Tension 1 | 311.650 | | None |
| Actual Tension 2 | 311.650 | | None |
| Actual Tension Sum | 623.306 | | None |
| Actual Tension Difference | 0.000 | | None |
| Security State | Unlocked | | None |
| Alarm Status | Alarm 1 = Off<br>Alarm 2 = Off | | None |
| Fault Status | Sensor 1 White/Black Disconnect<br>Sensor 2 White/Black Disconnect<br>Power Good | | None |
| Program Number | 100551 | | None |
| Program Version | 01.04 | | None |
| Product Type | DLCA NET-SLIM1 | | None |

Figure 10. Sample web server page

## 8.3 Tension calibration from web pages

To calibrate tension from the web pages edit the parameters below in the proper tension zone before performing the calibration commands.

### 8.3.1 Precision calibration from web pages

**Enter these parameters:**

Load Cell Excitation voltage (on Hardware web page)
Which Sensor Inputs Used (on Hardware web page)
Maximum Tension
Calibration Tension
Decimal Point Position

**Procedure**

1. Unload the load cells.
2. Click on the link to "Zero Calibrate Tension Zone x". Wait for the calibration to complete.
3. Apply the calibration weight to the temporary web.
4. Click on the link to "Precision Calibrate Tension Zone x". Wait for the calibration to complete.
5. The DCLA NET-SLIM will return either that the calibration is complete or return an error message.

*Weightless calibration procedure is on next page.*

### 8.3.2 Weightless calibration from web pages

**Enter these parameters:**

Load Cell Excitation voltage (on Hardware web page)
Which Sensor Inputs Used (on Hardware web page)
Load Cell Sensitivity
Load Cell Rating
Maximum Tension
Web Wrap Angle
Angle from Force Direction
Decimal Point Position

**Procedure**

1. Unload the load cells.
2. Click on the link to "Zero Calibrate Tension Zone x". Wait for the calibration to complete.
3. Click on the link to "Weightless Calibrate Tension Zone x".
4. The DCLA NET-SLIM will return that the calibration is complete or return an error message.

## 8.4 Zero tension from web pages

To zero the tension in a tension zone, unload the load cells, and then click on the link "Zero Tension Zone x". This is the same as pressing the [∅] button on the front panel.

## 9.0 Specifications

| | | |
|---|---|---|
| Supply voltage range | - | 24 VDC ±10%<br>Proper earth grounding is required.<br>Note that the negative supply and earth ground are interconnected on the product.<br>The power supply must have an SELV output, such as Puls ML15.241, Mean Well MDR-20-24 or equivalent.<br>The Mean Well MDR-20-24 can be purchased from Fife as Part No. 93157-024. |
| Supply current | - | 175 mA, maximum |
| Internal fuse | - | 6.3 A, fast blow |
| Maximum gain | - | 32:1 |
| Tare adjustment | - | 90% of load cell rating |
| Load cell excitation voltage | - | 5 or 7.5 VDC, 200 mA maximum |
| Load cell input | - | 1.5 mV/V to 100 mV/V |
| Tension update rate | - | 2 ms |
| Tension resolution | - | 14-Bit |
| Ethernet | - | 2 ports<br>10/100 Mbps |
| Fieldbus support | - | Modbus TCP<br>Ethernet/IP<br>PROFINET IO |
| Temperature effect on zero | - | 0.01% of full scale per °C |
| Temperature range | | |
| Operating | - | 0° to 60°C (32° to 140°F) |
| Storage | - | -20° to 80°C (-4° to 176°F) |
| Enclosure | - | IP20 |

## 10.0 Service

To request service or to get replacement parts, contact one of the following addresses or your regional office.

Fife
222 West Memorial Rd.
Oklahoma City, OK, 73114
USA
Phone: 1.405.755.1600
Fax: 1.405.755.8425
Web: www.maxcessintl.com

Fife-Tidland GmbH
Max-Planck-Strasse 8
65779 Kelkheim
Deutschland
Telefon: +49.6195.7002.0
Fax: +49.6195.7002.933
Web: www.maxcess.eu

When ordering replacement parts, please indicate, where possible, part number, drawing number and model description.

If it is necessary to return this product for service, take care to properly package the unit to prevent damage during shipment. If possible, use the original shipping containers.

AMERICAS
Tel +1.405.755.1600
Fax +1.405.755.8425
sales@maxcessintl.com
www.maxcessintl.com

EUROPE, MIDDLE EAST AND AFRICA
Tel +49.6195.7002.0
Fax +49.6195.7002.933
sales@maxcess.eu
www.maxcess.eu

CHINA
Tel +86.756.881.9398
Fax +86.756.881.9393
info@maxcessintl.com.cn
www.maxcessintl.com.cn

INDIA
Tel +91.22.27602633
Fax +91.22.27602634
india@maxcessintl.com
www.maxcess.in

JAPAN
Tel +81.43.421.1622
Fax +81.43.421.2895
japan@maxcessintl.com
www.maxcess.jp

KOREA, TAIWAN, AND SE ASIA
asia@maxcessintl.com
www.maxcess.asia

© 2018 Maxcess

Appendix A: DLCA NET-SLIM Flowchart

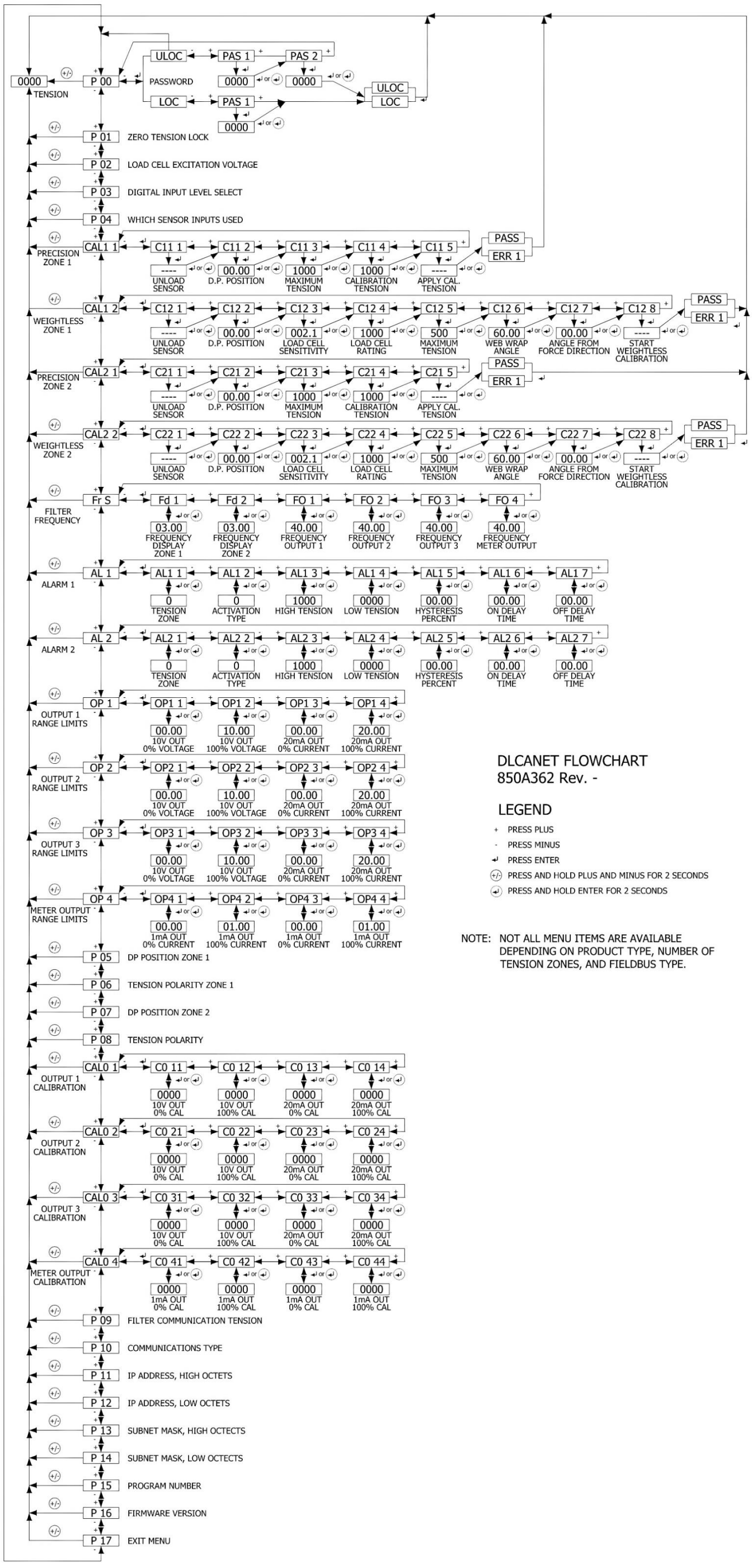


DLCANET FLOWCHART
850A362 Rev. -

LEGEND

- + PRESS PLUS
- - PRESS MINUS
- ↵ PRESS ENTER
- (+/-) PRESS AND HOLD PLUS AND MINUS FOR 2 SECONDS
- (↵) PRESS AND HOLD ENTER FOR 2 SECONDS

NOTE: NOT ALL MENU ITEMS ARE AVAILABLE DEPENDING ON PRODUCT TYPE, NUMBER OF TENSION ZONES, AND FIELDBUS TYPE.