Reference/Quote _____ Date _____ Phone _____

Customer _____ Email _____

Address _____

TIDLAND DIGITAL MEASUREMENT SYSTEM APPLICATION FORM

CORE INFO

Machine Name _____

Maximum Web Width (before trimming) _____

Maximum Trim Width (required) _____

Inside to Inside Machine Frame Distance _____

Power Supply

- ○ 110 VAC
- ○ 230 VAC
- ○ 230 VAC
- ○ 24 VDC

WINDER AND MACHINE INFO

Web Path

Wrap _____ Tangent _____

Slitting System

Shear _____ Razor _____

Score _____ Other _____

Make a sketch of the area including roller and web path with dimensions between roller and driven knife ring. Supply required dimensions. *More than 120 inches requires additional support(s)

NOT OFFICIAL DRAWING. ONLY FOR QUOTE PURPOSES. CUSTOMER TO VERIFY AT TIME OF QUOTE/ORDER

A. _____ B. _____

C. _____ D. _____

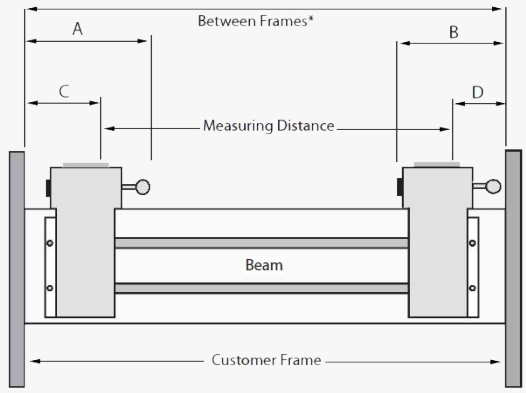

*more than 120" requires additional supports

H. _____

J. _____

K. _____

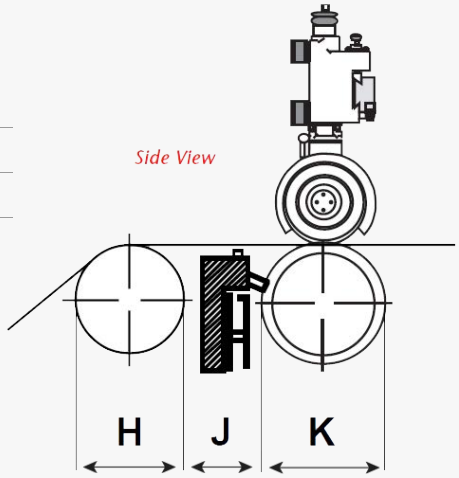

ADDITIONAL COMMENTS