MAGPOWR INSTALLATION DRAWING
FOR FURTHER ASSISTANCE,
PLEASE CONTACT MAGPOWR AT
800-624-7697
WEB SITE: WWW.MAGPOWR.COM
E-MAIL: MAGPOWR@MAGPOWR.COM

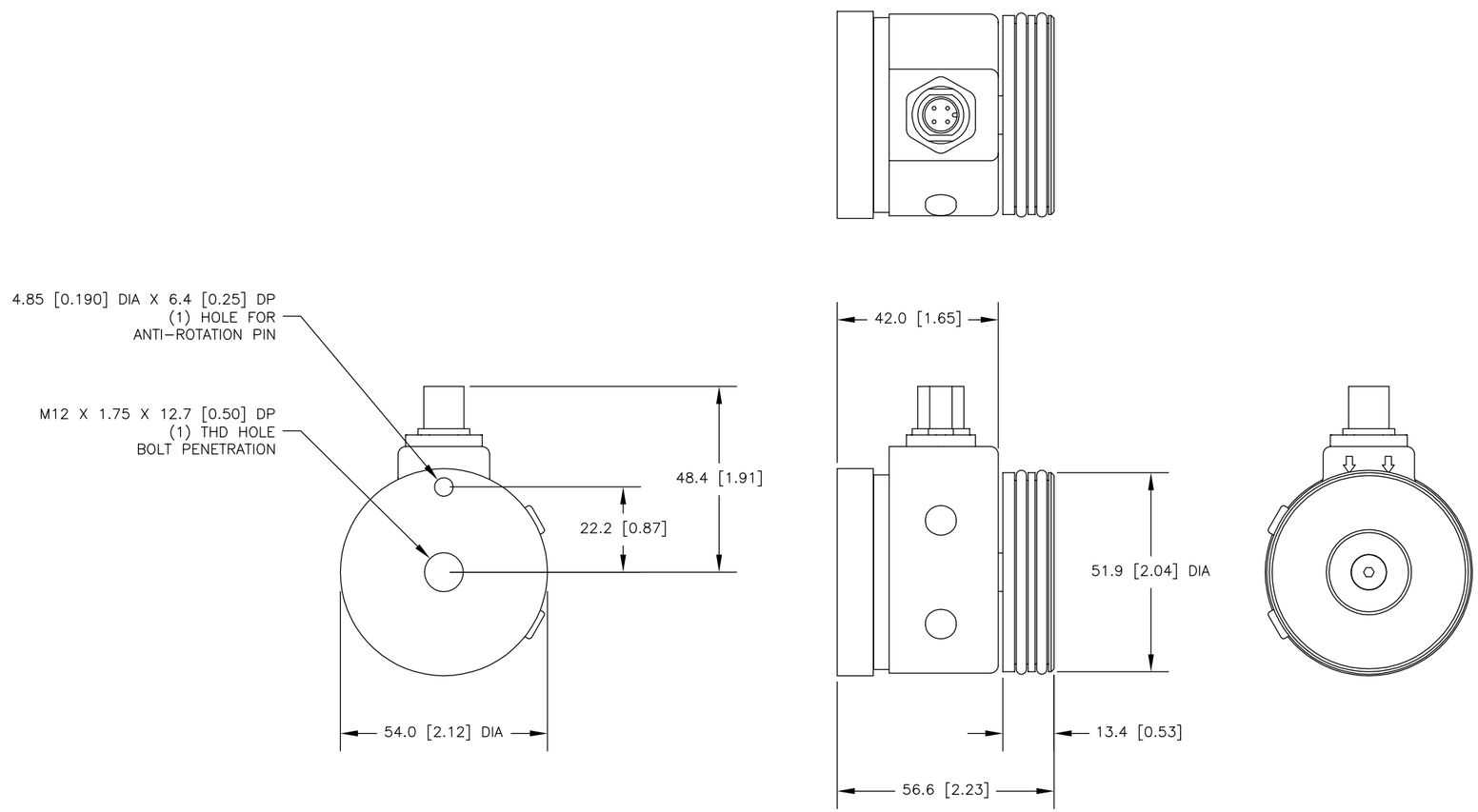

SYM	REVISION	BY	DATE	APVD

	BY	DATE
DRAWN	LZ	04/03/12
CHECKED	JGR	04/05/12
APPROVED	JGR	04/05/12

THIRD ANGLE PROJECTION

DIMENSIONS ARE SHOWN IN INCHES [mm] UNLESS OTHERWISE NOTED

MAXCESS
222 WEST MEMORIAL ROAD
OKLAHOMA CITY, OK 73114
TEL: 405.755.1600
FAX: 405.755.8425
WWW.MAXCESSINTL.COM

TITLE
MAGPOWR
OUTLINE DIMENSION DRAWING
SPLIT COUPLING MODEL LOAD CELL
METRIC STUD MOUNT
250 KG

DRAWING REFERENCE | NUMBER

UNLESS OTHERWISE SPECIFIED
GENERAL TOLERANCES: ISO 2768-mk
GEOMETRICAL SYMBOLS: ISO 1101
SURFACES: ISO 1302

This drawing is the property of FIFE CORPORATION. It is loaned with the understanding that it may not be reproduced nor may the information contained herein be used for the making of drawings or for manufacturing purposes without the written consent of FIFE CORPORATION.

STANDARD SHOP PRACTICES AND STANDARD SHOP TOLERANCES PER DRAWING 201724

DE-BURR ALL EDGES 0,5 [0,020] MAX

LOCATION	SCALE	SIZE	DRAWING NO.	SHEET NO.	REV
OK	1:1	A2	TS25SR-EC12M	1 OF 1	