LOAD CELL

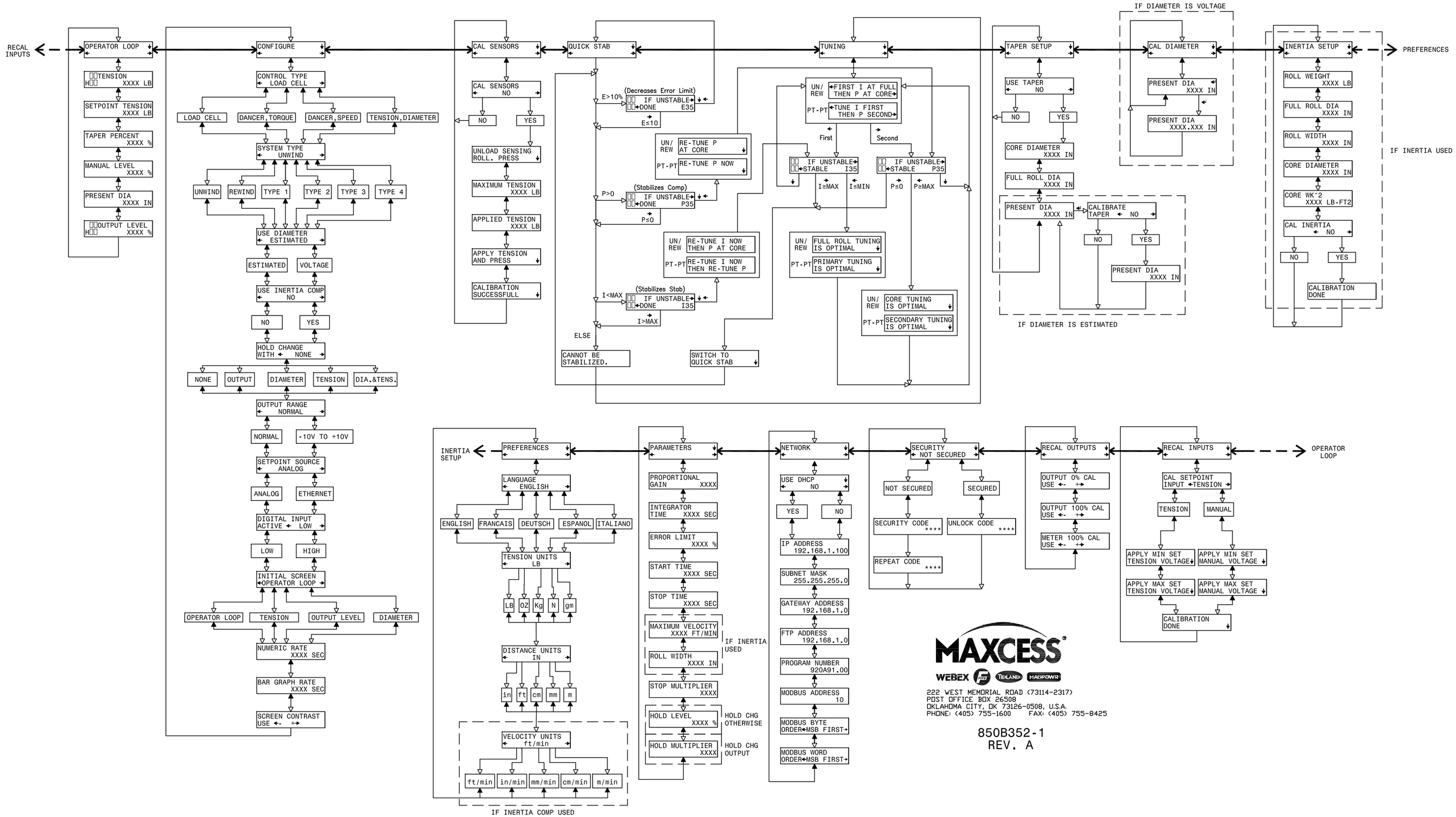

MAXCESS®
WEBEX TIDLAND MAGPOWR
222 WEST MEMORIAL ROAD (73114-2317)
POST OFFICE BOX 26508
OKLAHOMA CITY, OK 73126-0508, U.S.A.
PHONE: (405) 755-1600 FAX: (405) 755-8425

850B352-1
REV. A

DANCER, TORQUE, NO DIAMETER

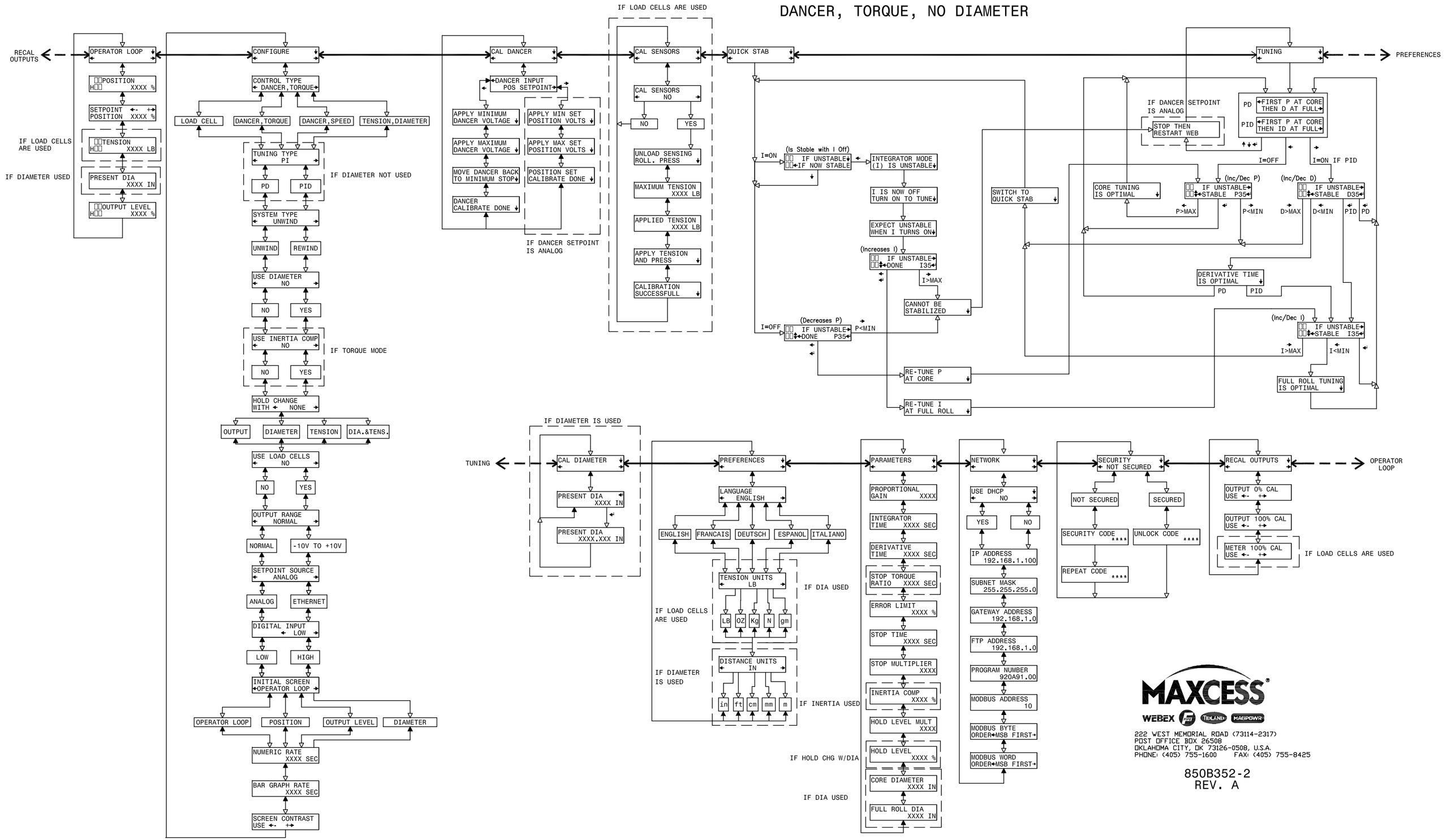

DANCER, TORQUE, DIAMETER

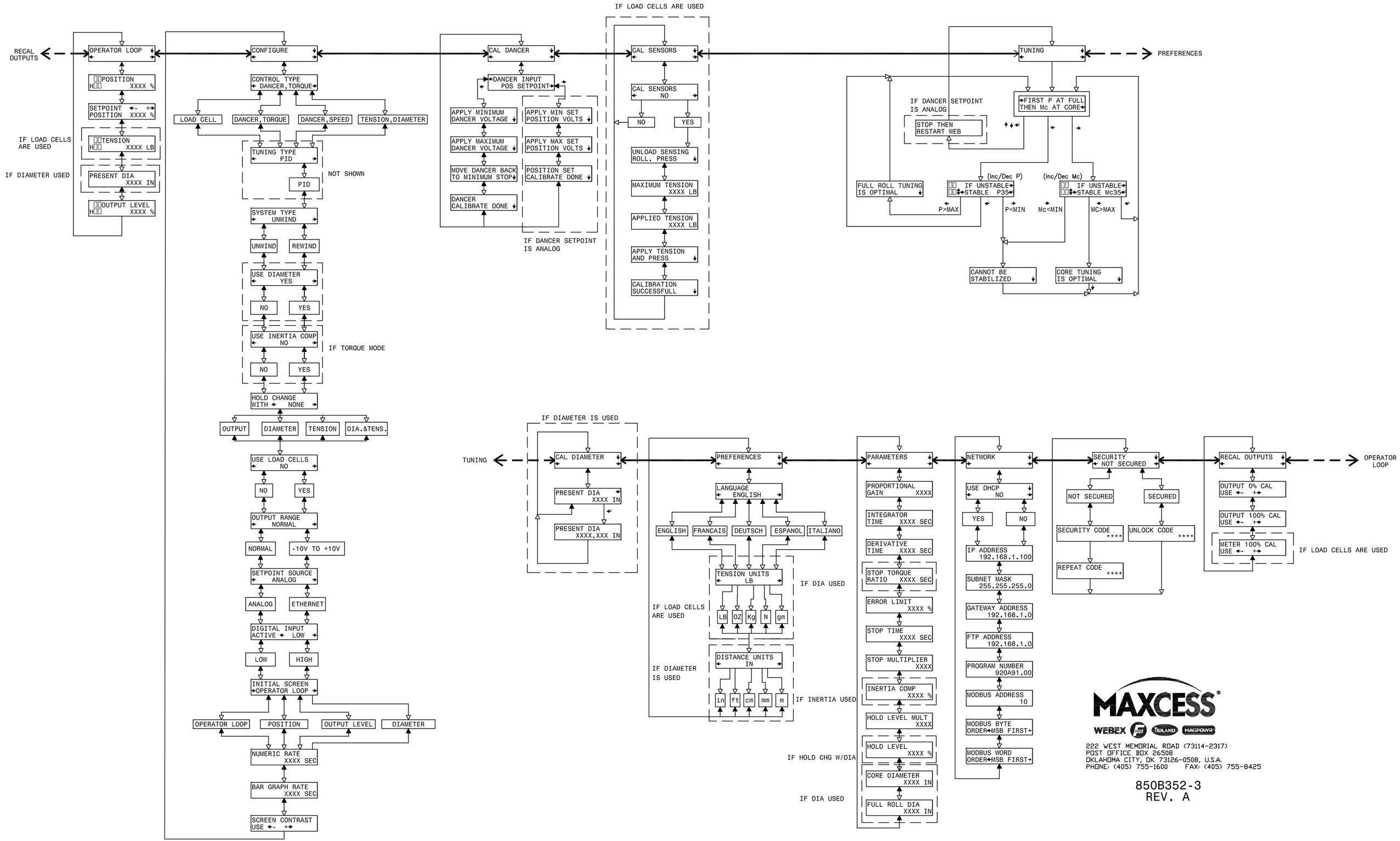

MAXCESS®
WEBEX TIDLAND MAGPOWR
222 WEST MEMORIAL ROAD (73114-2317)
POST OFFICE BOX 26508
OKLAHOMA CITY, OK 73126-0508, U.S.A.
PHONE: (405) 755-1600 FAX: (405) 755-8425

850B352-3
REV. A

DANCER, SPEED, WITH OR WITHOUT DIAMETER

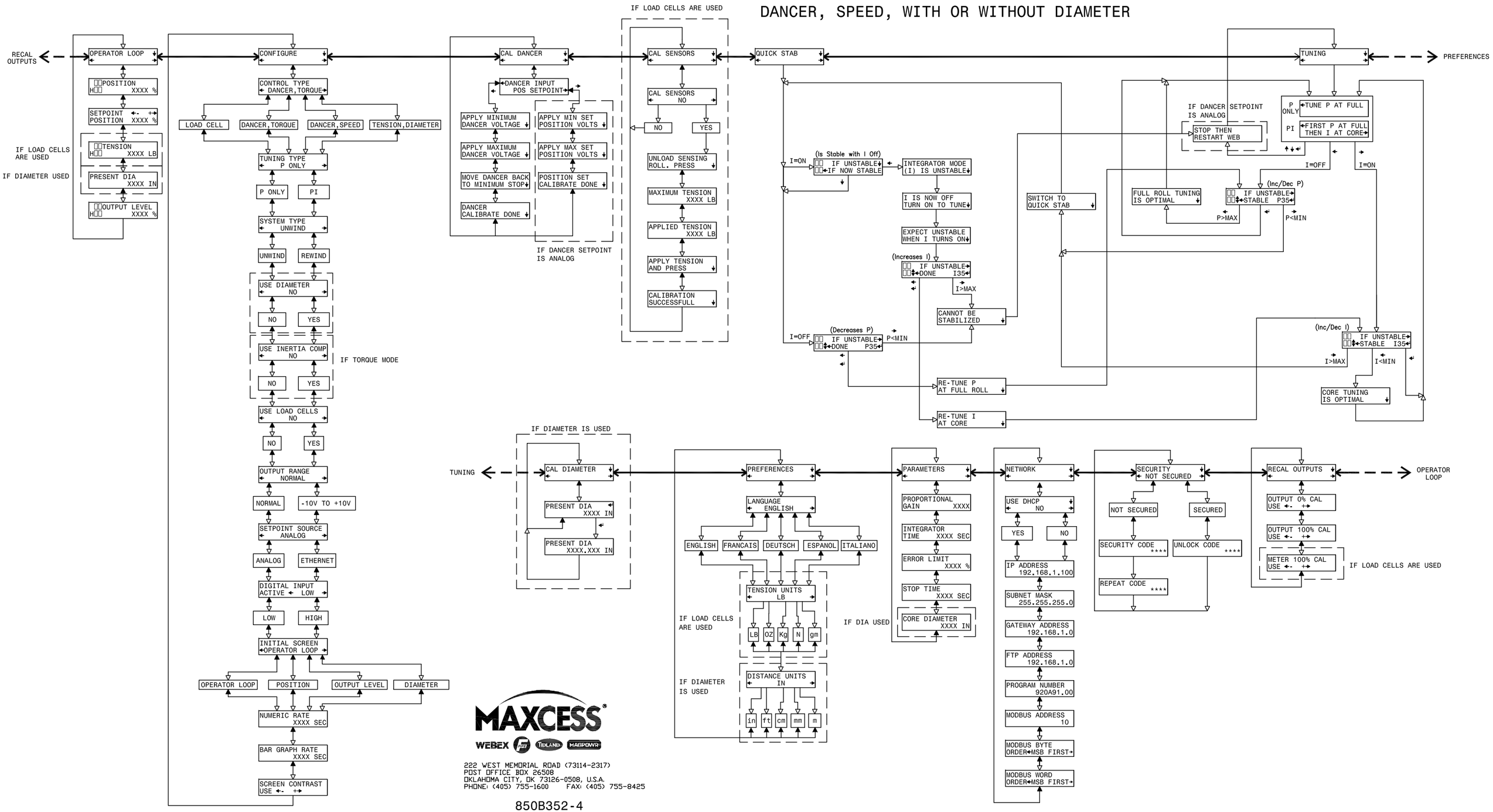

MAXCESS®
WEBEX TIDLAND MAGPOWR
222 WEST MEMORIAL ROAD (73114-2317)
POST OFFICE BOX 26508
OKLAHOMA CITY, OK 73126-0508, U.S.A.
PHONE: (405) 755-1600 FAX: (405) 755-8425

850B352-4
REV. A

OPEN LOOP TENSION BASED ON DIAMETER

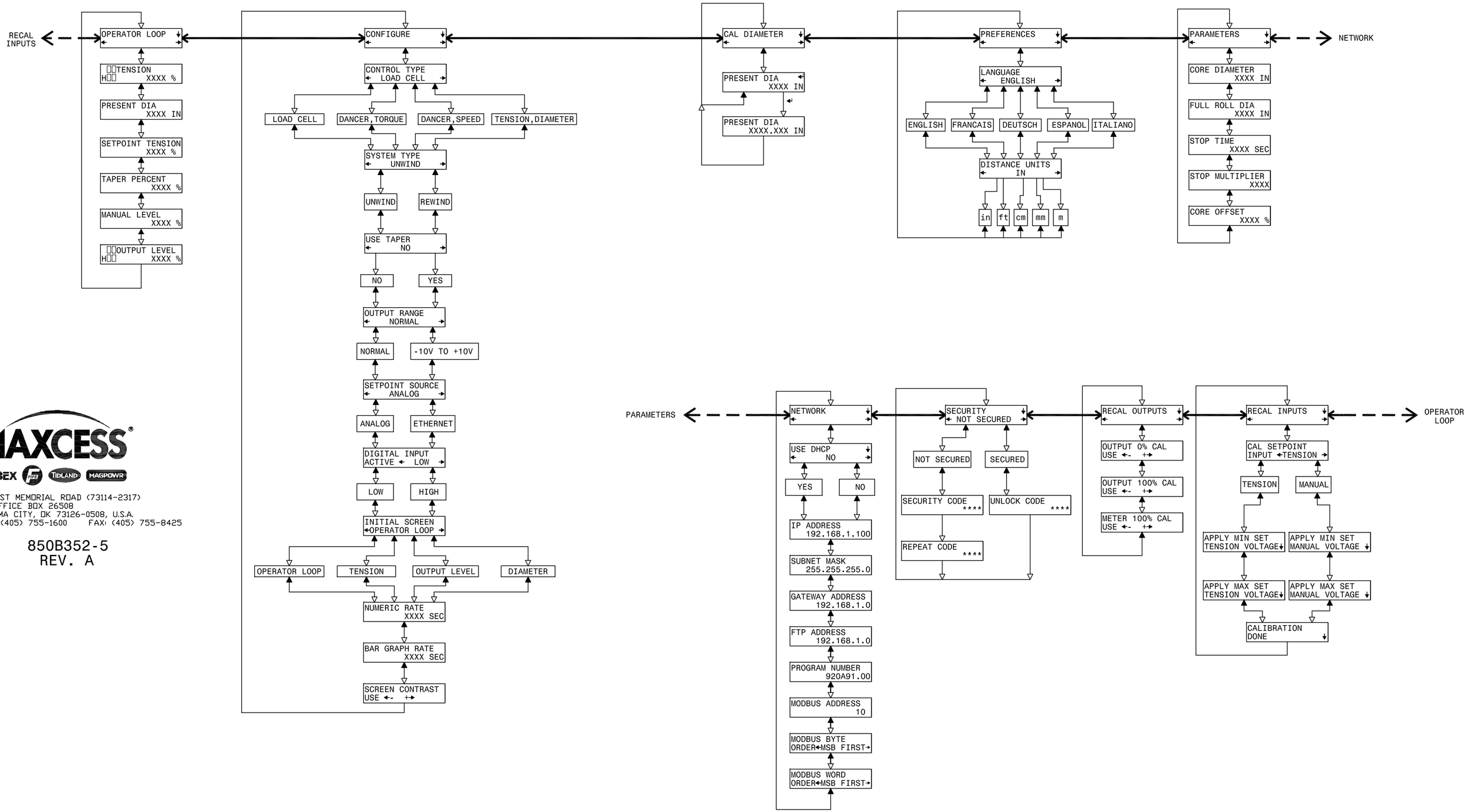

MAXCESS®
WEBEX TIDLAND MAGPOWR

222 WEST MEMORIAL ROAD (73114-2317)
POST OFFICE BOX 26508
OKLAHOMA CITY, OK 73126-0508, U.S.A.
PHONE: (405) 755-1600 FAX: (405) 755-8425

850B352-5
REV. A