Reference/Quote _____ Date _____ Phone _____

Customer _____ Email _____

Address _____

# WEBEX DEAD SHAFT IDLER ROLL SPECIFICATION FORM

## SPECIFICATIONS

Operating Temperature _____

Web Material _____

Web Width
Min Max

Maximum Line Speed _____

Web Tension _____

Wrap Angle _____

Nip Load (Magnitude & Direction) _____

Maximum Allowable Center Deflection _____

Quantity of Rolls _____

Shell Base Material _____

Shaft Material _____

Shaft End _____

Roll Face Coating / Coverings _____

Grooving on Roll Face _____

Supply Mounting
- ○ Yes
- ○ No

Mounting Type _____

Straightness (Taper)
(0.0005 in/ft of face length is default for TIR and taper)

_____

Run-Out _____

**NOT OFFICIAL DRAWING. ONLY FOR QUOTE PURPOSES. CUSTOMER TO VERIFY AT TIME OF QUOTE/ORDER**

Is Drawing Available?
- ○ No
- ○ Yes (Please send with this form)

Units
- ○ Millimeters
- ○ Inches

Is Diameter Nominal*
- ○ Yes
- ○ No (specify tolerance range) _____

* Tube purchased at size and turned down minimally to achieve straightness and TIR

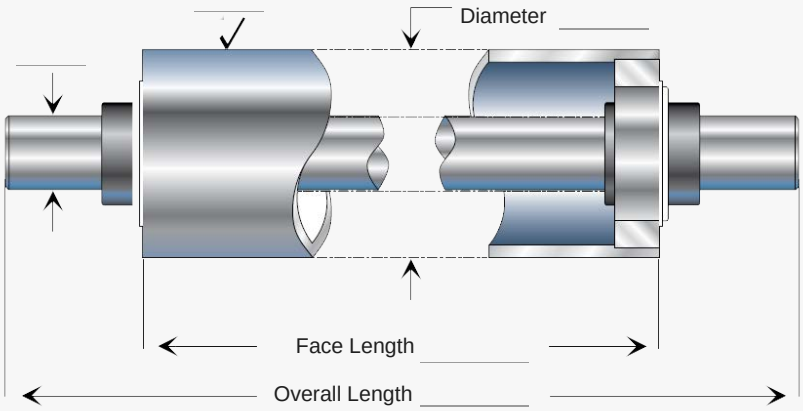


ADDITIONAL COMMENTS