Reference/Quote _____ Date _____ Phone _____

Customer _____ Email _____

Address _____

WEBEX HEAT TRANSFER ROLLS FORM

CORE INFO (Please Specify Units)

Number of Rolls _____

Concentricity (TIR)
Bearing Fits to Roll Body _____

Flow Arrangement and Union Size
(In and out same end, in and out opposite ends) _____

Anticipated Fluid Flow _____

Material(s) of Construction _____

☐ Roll Must Be ASME Certified

PLATING / COATING

Type _____

Extent of Coverage _____

Retained Thickness _____

Surface Finish _____

WEB INFO (Please Specify Units)

Nip Load (Magnitude and Direction) _____

Web Tension _____

Wrap Angle _____

Maximum Line Speed _____

Maximum Allowable Center Deflection _____

Balance Requirements
(If dynamic, specify grade: G6.3, G2.5, G1.0, etc) _____

NOT OFFICIAL DRAWING. ONLY FOR QUOTE PURPOSES. CUSTOMER TO VERIFY AT TIME OF QUOTE/ORDER

Is Drawing Available?

- ○ No
- ○ Yes (Please send with this form)

Units

- ○ Millimeters
- ○ Inches

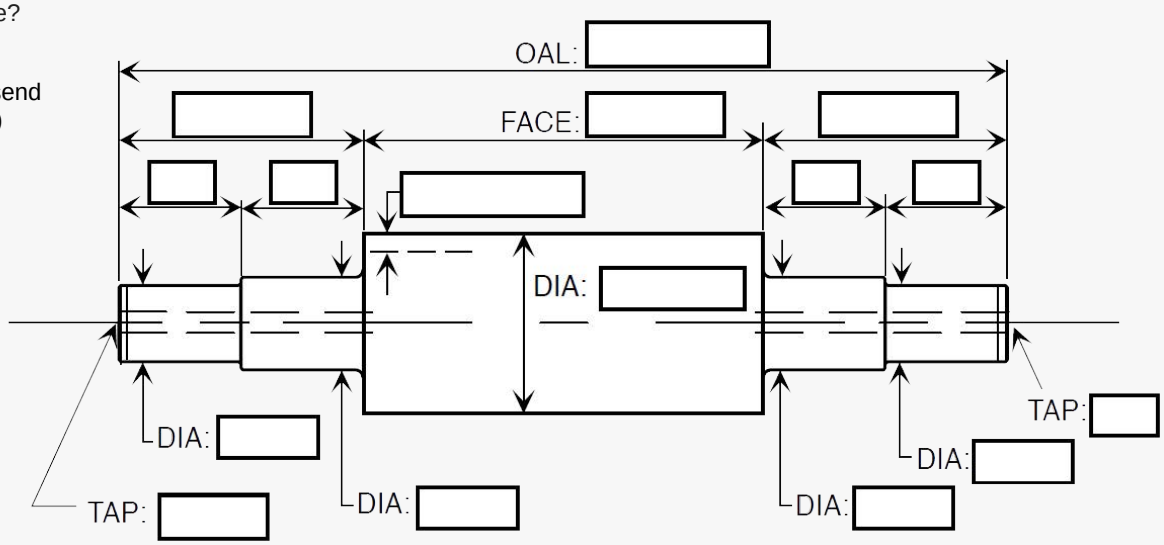

ADDITIONAL COMMENTS